

New Mediators and their Impact on Exotic Atoms

Prof. Francesco D'Eramo
Dr. Simone Manti
Tobia Vecchiatto Montorio

New-EXOTICA: New Frontiers in Exotic Atoms

The Standard Model...

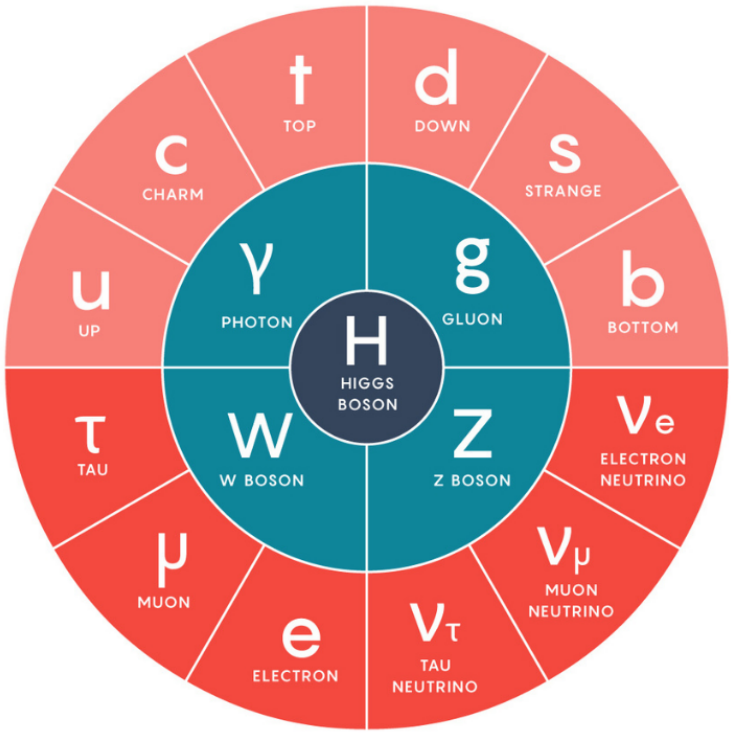

But the puzzle is not finished yet...

...and Beyond

SISSA

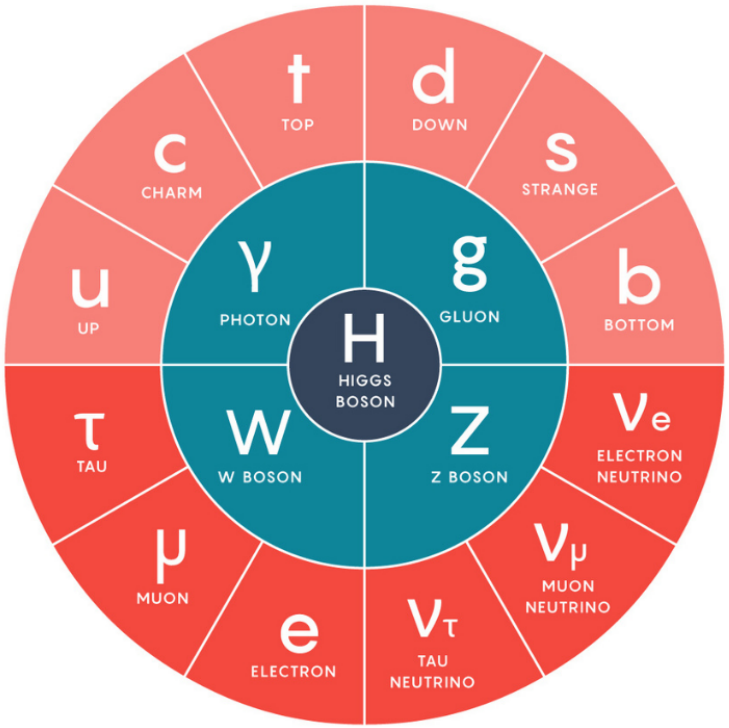

Dark Matter

Hierarchy Problem

Neutrino Masses

Strong CP Problem

Baryon Asymmetry

Quantum Gravity

But the puzzle is not finished yet...

Table of Contents

1. Motivations for Exotic Atoms as New Physics Probes
2. Shift in Exotic Atoms' Spectra
3. SIDDHARTA-2 Experimental Setup
4. Original Bounds on New Physics Models

Table of Contents

1. Motivations for Exotic Atoms as New Physics Probes
2. Shift in Exotic Atoms' Spectra
3. SIDDHARTA-2 Experimental Setup
4. Original Bounds on New Physics Models

What are Exotic Atoms?

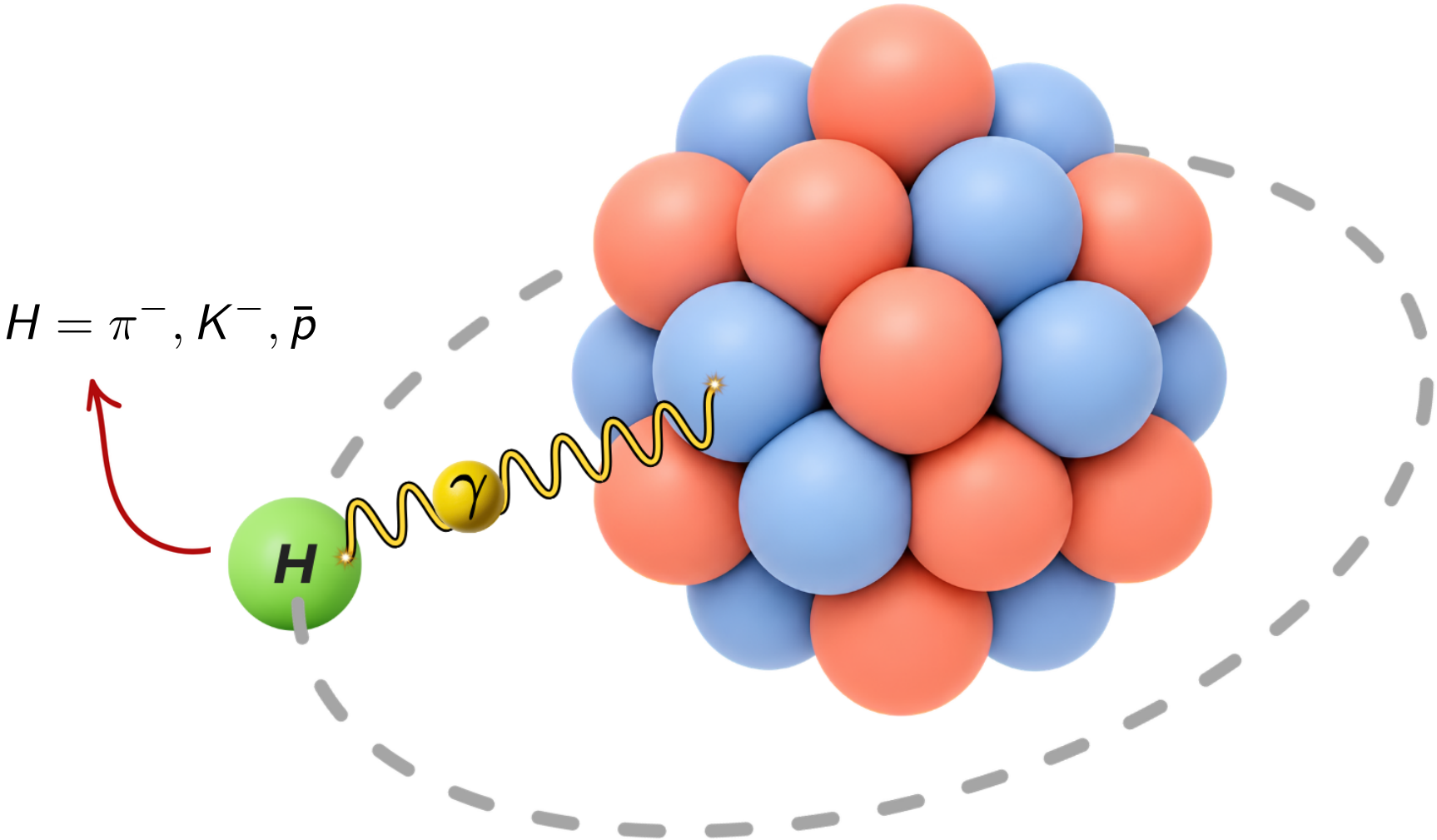

What are Exotic Atoms?

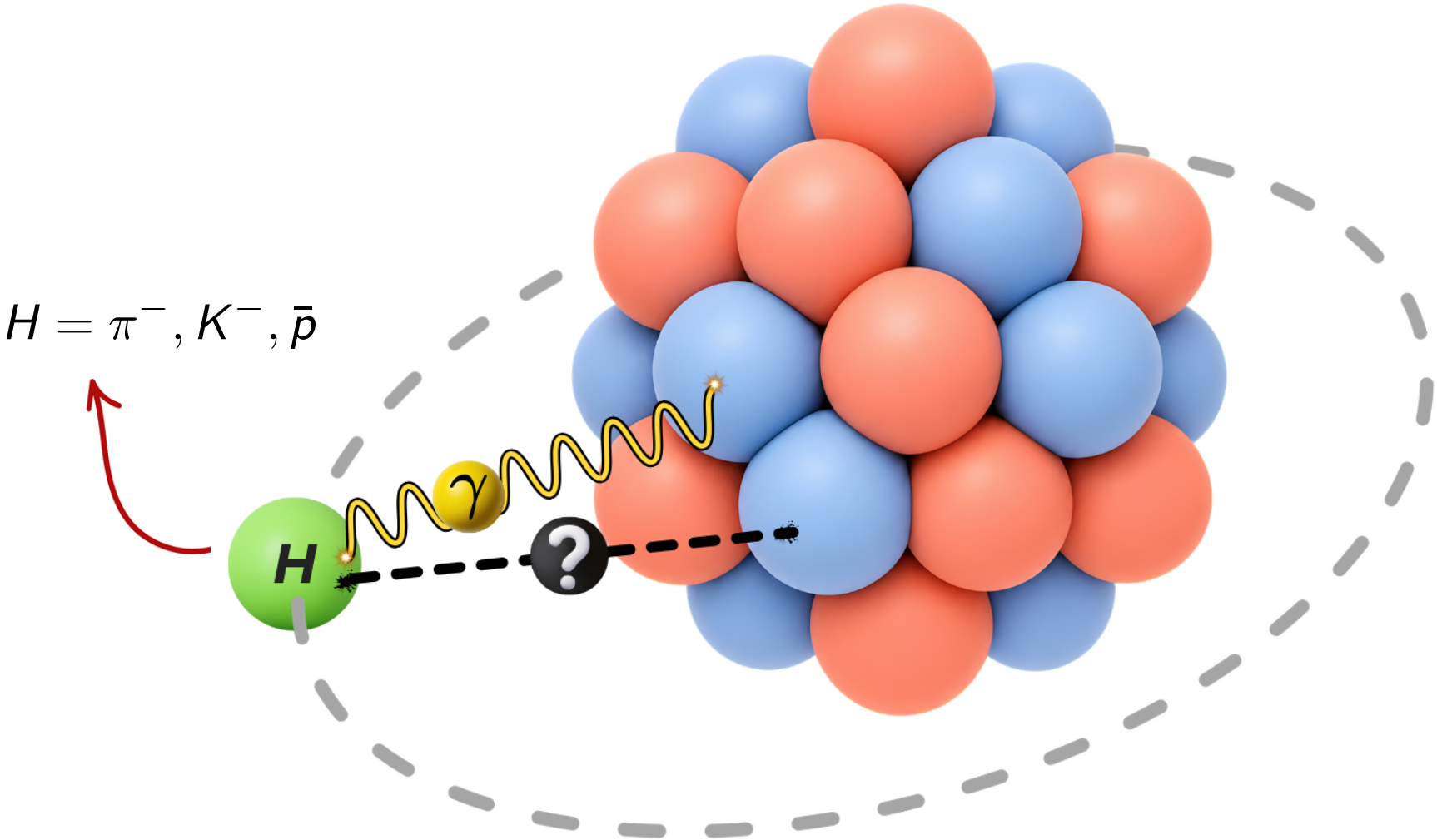

Why Exotic Atoms?

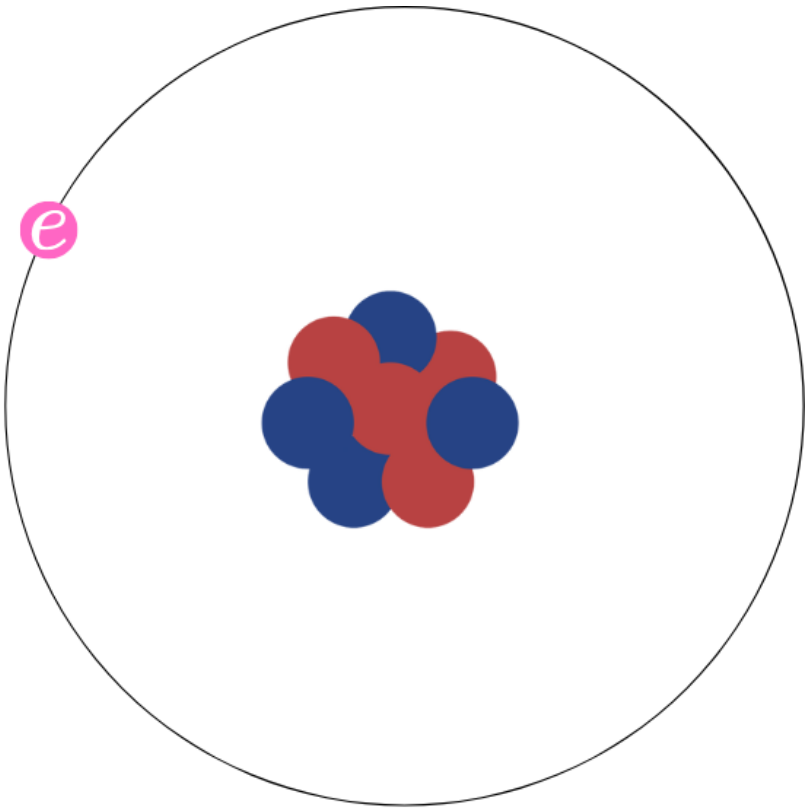

The Bohr radius for an ordinary atom is:

$$r_{B,e} \propto \frac{1}{m_e}$$

Why Exotic Atoms?

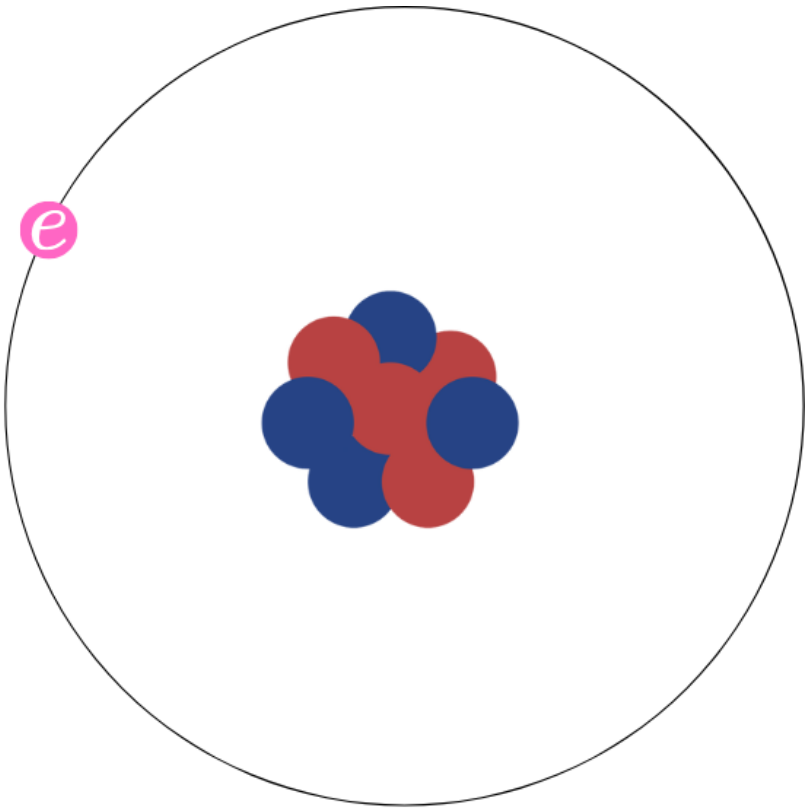

The Bohr radius for an ordinary atom is:

$$r_{B,e} \propto \frac{1}{m_e}$$

If we replace the electron with a hadron with $m_H \gg m_e$:

Why Exotic Atoms?

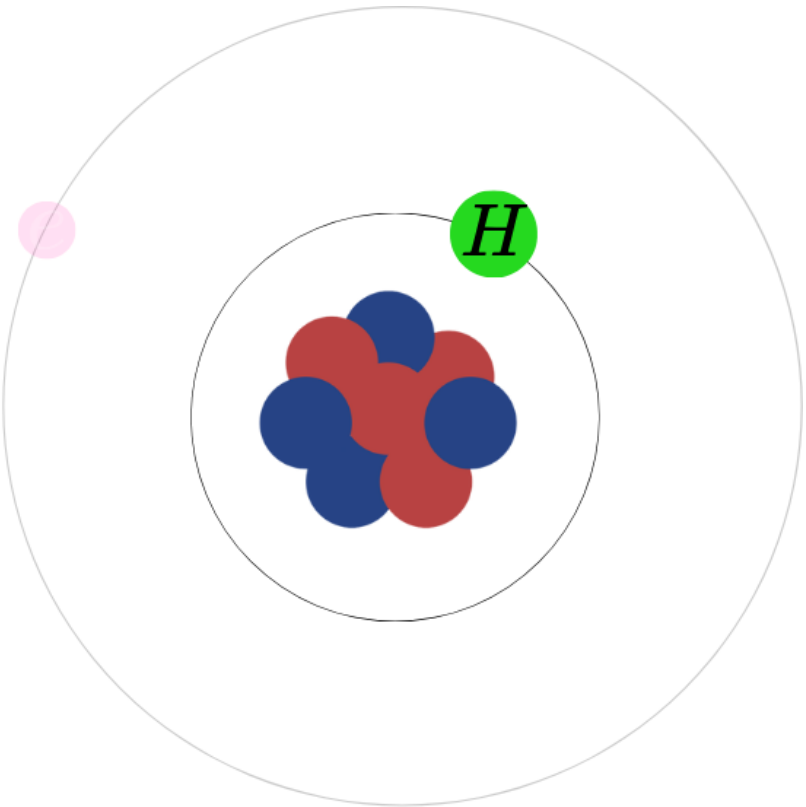

The Bohr radius for an ordinary atom is:

$$r_{B,e} \propto \frac{1}{m_e}$$

If we replace the electron with a hadron with $m_H \gg m_e$:

$$r_{B,H} \ll r_{B,e}$$

and our system is much more sensitive to short-distance forces.

Energy Levels

$$E_n^{\rm exp} = E_n^{\rm SM} + \delta E_n^{NP}$$

with n the principal quantum number of the considered level.

Energy Levels

$$E_n^{\mathrm{exp}} = E_n^{\mathrm{SM}} + \delta E_n^{NP}$$

with n the principal quantum number of the considered level.

- Coulomb interaction (calculable)

Energy Levels

$$E_n^{\mathrm{exp}} = E_n^{\mathrm{SM}} + \delta E_n^{NP}$$

with n the principal quantum number of the considered level.

- Coulomb interaction (calculable)
- QED corrections (calculable)

Trassinelli et al. (2007) Phys. Rev. A

Energy Levels

$$E_n^{\mathrm{exp}} = E_n^{\mathrm{SM}} + \delta E_n^{NP}$$

with n the principal quantum number of the considered level.

- Coulomb interaction (calculable)
- QED corrections (calculable)
- Low-energy QCD (zero for high-n circular states)

Trassinelli et al. (2007) Phys. Rev. A

Paul et al. (2021) Phys. Rev. Lett. 126

Energy Levels

$$E_n^{\mathrm{exp}} = E_n^{\mathrm{SM}} + \delta E_n^{NP}$$

with n the principal quantum number of the considered level.

E_n^{SM}
- Coulomb interaction (calculable)
- QED corrections (calculable)
- Low-energy QCD (zero for high-n circular states)
- Atom polarizability (negligible for kaonic atoms)

Trassinelli et al. (2007) Phys. Rev. A

Paul et al. (2021) Phys. Rev. Lett. 126

Ericson et al. (1972) Nucl Phys B 47

Energy Levels

$$E_n^{\text{exp}} = E_n^{\text{SM}} + \delta E_n^{NP}$$

with n the principal quantum number of the considered level.

E_n^{SM}
- Coulomb interaction (calculable)
- QED corrections (calculable)
- Low-energy QCD (zero for high-n circular states)
- Atom polarizability (negligible for kaonic atoms)

δE_n^{NP}
- New Physics shift (unknown)

Trassinelli et al. (2007) Phys. Rev. A

Paul et al. (2021) Phys. Rev. Lett. 126

Ericson et al. (1972) Nucl Phys B 47

Energy Levels

$$E_n^{\mathrm{exp}} = E_n^{\mathrm{SM}} + \delta E_n^{NP}$$

with n the principal quantum number of the considered level.

E_n^{SM}
- Coulomb interaction (calculable)
- QED corrections (calculable)
- Low-energy QCD (zero for high-n circular states)
- Atom polarizability (negligible for kaonic atoms)

δE_n^{NP}
- New Physics shift (unknown)

Trassinelli et al. (2007) Phys. Rev. A

Paul et al. (2021) Phys. Rev. Lett. 126

Ericson et al. (1972) Nucl Phys B 47

From a transition between the initial and final circular states $n_i \to n_f$, we detect experimentally $E_{n_i,n_f}^{\mathrm{exp}} \equiv E_{n_i}^{\mathrm{exp}} - E_{n_f}^{\mathrm{exp}}$ and we can obtain a 95% confidence level bound from:

$$\left|\delta E_{n_i,n_f}^{NP}\right| < \left|E_{n_i,n_f}^{\mathrm{exp}} - E_{n_i,n_f}^{\mathrm{SM}}\right| + 2\sigma_{E_{n_i,n_f}^{\mathrm{exp}}}$$

Table of Contents

1. Motivations for Exotic Atoms as New Physics Probes
2. Shift in Exotic Atoms' Spectra
3. SIDDHARTA-2 Experimental Setup
4. Original Bounds on New Physics Models

Non-Relativistic Potentials

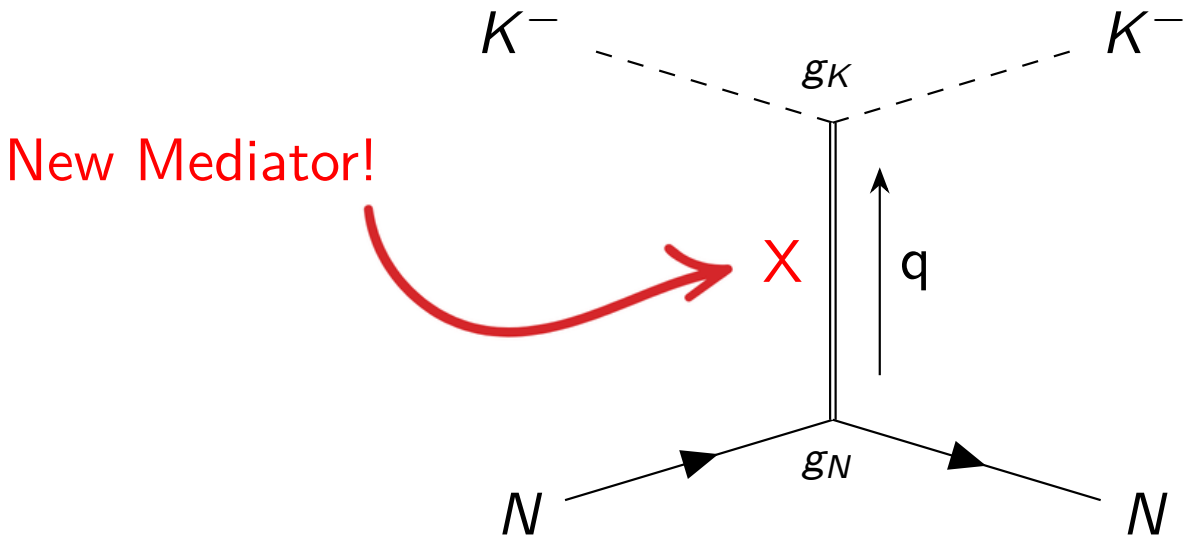

Non-Relativistic Potentials

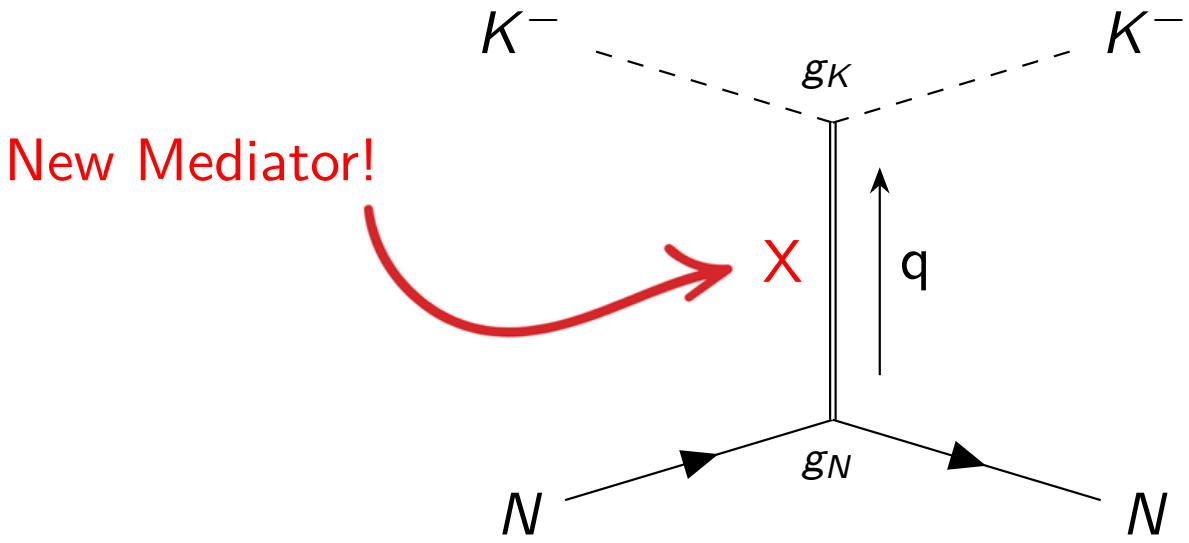

From the Non Relativistic (NR) limit of the amplitude, we obtain:

$$V(\boldsymbol{r}) = \frac{1}{(2\pi)^3}\int d^3q \frac{\mathcal{M}_{NR}(q)}{4m_N m_K} e^{i\boldsymbol{qr}} = \underbrace{-g_K g_N \frac{e^{-m_X r}}{4\pi r}}_{\text{Yukawa Potential}} + \ldots$$

Non-Relativistic Potentials

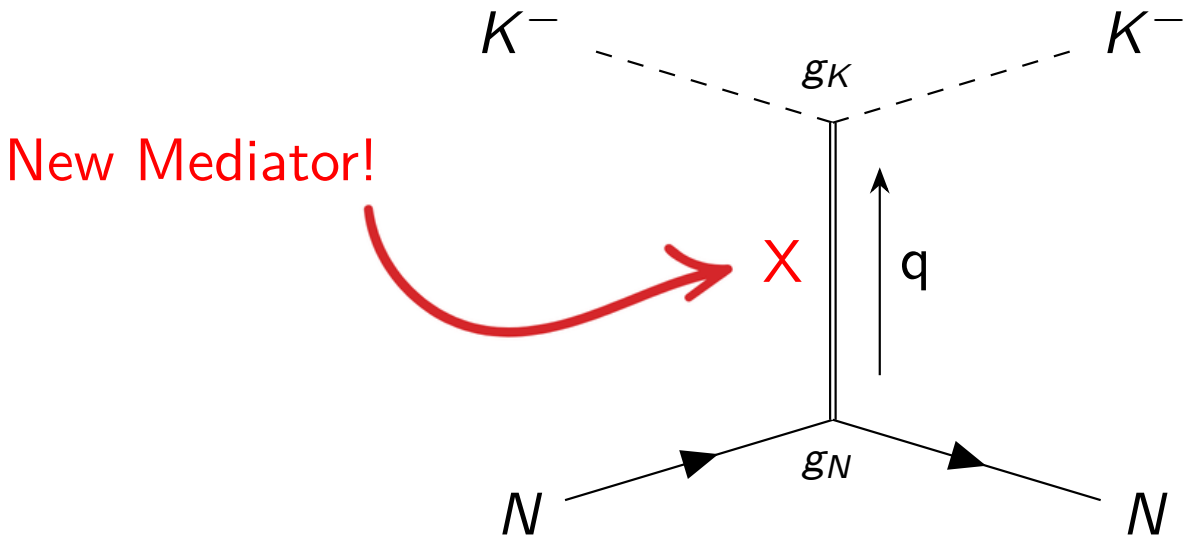

From the Non Relativistic (NR) limit of the amplitude, we obtain:

$$V(\boldsymbol{r}) = \frac{1}{(2\pi)^3}\int d^3q \frac{\mathcal{M}_{NR}(q)}{4m_N m_K} e^{i\boldsymbol{q}\boldsymbol{r}} = \underbrace{-g_K g_N \frac{e^{-m_X r}}{4\pi r}}_{\text{Yukawa Potential}} + \ldots$$

Evaluating this result on the n-th circular state ($r_n \equiv a_B n^2$):

$$\delta E_n^X = \langle V(r)\rangle_n = g_K g_N \frac{1}{4\pi r_n}\left(1+\frac{r_n m_X}{2n}\right)^{-2n} \equiv g_K g_N Y_n^X$$

Liu *et al.* (2025) 2502.03537

New shift: Dark Photon model

$$\mathcal{L} = -\frac{1}{4}\hat{F}_{\mu\nu}\hat{F}^{\mu\nu} - \frac{1}{4}\hat{F}'_{\mu\nu}\hat{F}'^{\mu\nu} - \frac{\varepsilon}{2}\hat{F}_{\mu\nu}\hat{F}'^{\mu\nu} + \frac{1}{2}m_{\hat{A}'}\hat{A}'_{\mu}\hat{A}'^{\mu}$$

with $\hat{F}'^{\mu\nu}$ the field strength tensor of a new abelian $\hat{A}'_{\mu}$. Moving to the mass basis:

$$\mathcal{L}^{\text{int}} = \sum_{f} eQ_f \bar{f}\gamma^{\mu} f(A_{\mu} + \varepsilon A'_{\mu})$$

New shift: Dark Photon model

$$\mathcal{L} = -\frac{1}{4}\hat{F}_{\mu\nu}\hat{F}^{\mu\nu} - \frac{1}{4}\hat{F}'_{\mu\nu}\hat{F}'^{\mu\nu} - \frac{\varepsilon}{2}\hat{F}_{\mu\nu}\hat{F}'^{\mu\nu} + \frac{1}{2}m_{\hat{A}'}\hat{A}'_{\mu}\hat{A}'^{\mu}$$

with $\hat{F}'^{\mu\nu}$ the field strength tensor of a new abelian $\hat{A}'_{\mu}$. Moving to the mass basis:

$$\mathcal{L}^{\text{int}} = \sum_{f} eQ_f \bar{f}\gamma^{\mu} f(A_{\mu} + \varepsilon A'_{\mu})$$

$$\Big\downarrow \text{ QCD confinement}$$

$$\mathcal{L}_{\chi} = ie\varepsilon A'_{\mu}(K^{+}\partial^{\mu}K^{-} - K^{-}\partial^{\mu}K^{+}) - \varepsilon e A'_{\mu}\bar{p}\gamma^{\mu}p + \ldots$$

New shift: Dark Photon model

$$\mathcal{L} = -\frac{1}{4}\hat{F}_{\mu\nu}\hat{F}^{\mu\nu} - \frac{1}{4}\hat{F}'_{\mu\nu}\hat{F}'^{\mu\nu} - \frac{\varepsilon}{2}\hat{F}_{\mu\nu}\hat{F}'^{\mu\nu} + \frac{1}{2}m_{\hat{A}'}\hat{A}'_{\mu}\hat{A}'^{\mu}$$

with $\hat{F}'^{\mu\nu}$ the field strength tensor of a new abelian $\hat{A}'_{\mu}$. Moving to the mass basis:

$$\mathcal{L}^{\text{int}} = \sum_{f} eQ_f \bar{f}\gamma^{\mu} f(A_{\mu} + \varepsilon A'_{\mu})$$

$$\downarrow \quad \text{QCD confinement}$$

$$\mathcal{L}_{\chi} = ie\varepsilon A'_{\mu}(K^{+}\partial^{\mu}K^{-} - K^{-}\partial^{\mu}K^{+}) - \varepsilon e A'_{\mu}\bar{p}\gamma^{\mu}p + \ldots$$

$$\downarrow \quad \text{NR scattering amplitude}$$

$$V(r) = -\varepsilon^2 e^2 \frac{e^{-m_{A'}r}}{4\pi r} + \varepsilon^2 e^2 \boldsymbol{S}_p \cdot \frac{\boldsymbol{L}}{\mu}\left(m_X + \frac{1}{r}\right)\frac{e^{-m_X r}}{2\pi r^2}$$

New shift: Dark Photon model

$$\mathcal{L} = -\frac{1}{4}\hat{F}_{\mu\nu}\hat{F}^{\mu\nu} - \frac{1}{4}\hat{F}'_{\mu\nu}\hat{F}'^{\mu\nu} - \frac{\varepsilon}{2}\hat{F}_{\mu\nu}\hat{F}'^{\mu\nu} + \frac{1}{2}m_{\hat{A}'}\hat{A}'_{\mu}\hat{A}'^{\mu}$$

with $\hat{F}'^{\mu\nu}$ the field strength tensor of a new abelian $\hat{A}'_{\mu}$. Moving to the mass basis:

$$\mathcal{L}^{\text{int}} = \sum_f eQ_f \bar{f}\gamma^{\mu} f(A_{\mu} + \varepsilon A'_{\mu})$$

↓ QCD confinement

$$\mathcal{L}_{\chi} = ie\varepsilon A'_{\mu}(K^+\partial^{\mu}K^- - K^-\partial^{\mu}K^+) - \varepsilon e A'_{\mu}\bar{p}\gamma^{\mu}p + \ldots$$

↓ NR scattering amplitude

$$V(r) = -\varepsilon^2 e^2 \frac{e^{-m_{A'}r}}{4\pi r} + \varepsilon^2 e^2 \boldsymbol{S}_p \cdot \frac{\boldsymbol{L}}{\mu}\left(m_X + \frac{1}{r}\right)\frac{e^{-m_X r}}{2\pi r^2}$$

↓ evaluated on the n-th circular state

$$\delta E^{A'}_{n,j} = -\varepsilon^2 e^2 \left[1 - \frac{C_{jns}}{\mu}\left(\frac{m_{A'}}{2n + r_n m_{A'}} + \frac{1}{(2n-2)r_n}\right)\frac{4n^2}{2n-1}\frac{1}{r_n}\left(1 + \frac{r_n m_{A'}}{2n}\right)^2\right] Y^{A'}_n$$

with $C_{jns} = j(j+1) - n(n-1) - s_p(s_p - 1)$

New shift: Dark Photon model

$$\delta E^{A'}_{n,j} = \delta E^{A'}_{\mathrm{SI}}(n) + \delta E^{A'}_{\mathrm{SD}}(n,j)$$

New shift: Dark Photon model

SISSA

$$\delta E^{A'}_{n,j} = \delta E^{A'}_{\rm SI}(n) + \delta E^{A'}_{\rm SD}(n,j)$$

We do not have access to the hyperfine structure of the atom and in order to account for our new correction we will need to consider:

$$(n_i, j_i) \longrightarrow (n_f, j_f)$$

$d_i = 2j_i + 1$: initial state occupation number

$d_f = 2j_f + 1$: final state occupation number

New shift: Dark Photon model

SISSA

$$\delta E^{A'}_{n,j} = \delta E^{A'}_{\rm SI}(n) + \delta E^{A'}_{\rm SD}(n,j)$$

We do not have access to the hyperfine structure of the atom and in order to account for our new correction we will need to consider:

$$(n_i, j_i) \longrightarrow (n_f, j_f)$$

$d_i = 2j_i + 1$: initial state occupation number

$d_f = 2j_f + 1$: final state occupation number

For the bounds on the $n_i \to n_f$ transition we will use:

$$\delta \bar{E}^{A'}_{n_i,n_f,\rm SD} = \frac{\sum_{j_i,j_f,E1} \left[\delta E^{A'}_{\rm SD}(n_i,j_i) - \delta E^{A'}_{\rm SD}(n_f,j_f)\right] d_{j_i} d_{j_f}}{\sum_{j_i,j_f;\rm E1} d_{j_i} d_{j_f}}$$

Scalar & Pseudo-Scalar exchange

SISSA

We can also consider the exchange of a new scalar or pseudo-scalar mediator. The only interaction terms with kaons and nucleons that contribute to the shift are:

$$\mathcal{L}_S = \frac{g_N^s}{\Lambda}\phi\bar{N}N + g_K^s\frac{m_K^2}{\Lambda}\phi K^+K^- + \frac{g_K^d}{\Lambda}\phi\partial_\mu K^+\partial^\mu K^-$$

where Λ is a UV mass scale. Note that if ϕ is a pseudo-scalar the Lagrangian violates CP.

Scalar & Pseudo-Scalar exchange

SISSA

We can also consider the exchange of a new scalar or pseudo-scalar mediator. The only interaction terms with kaons and nucleons that contribute to the shift are:

$$\mathcal{L}_S = \frac{g_N^s}{\Lambda}\phi\bar{N}N + g_K^s\frac{m_K^2}{\Lambda}\phi K^+K^- + \frac{g_K^d}{\Lambda}\phi\partial_\mu K^+\partial^\mu K^-$$

where Λ is a UV mass scale. Note that if ϕ is a pseudo-scalar the Lagrangian violates CP.

The new potential is:

$$V(\boldsymbol{r}) = 2g_N^s(g_K^s+g_K^d)\frac{m_K}{\Lambda^2}\frac{e^{-m_\phi r}}{16\pi r} - g_N^s g_K^d\left(\frac{m_\phi}{m_K}\right)^2\frac{m_K}{\Lambda^2}\frac{e^{-m_\phi r}}{16\pi r} + g_N^s g_K^d\frac{\delta^3(\boldsymbol{r})}{4\Lambda^2 m_K}$$

Scalar & Pseudo-Scalar exchange

SISSA

We can also consider the exchange of a new scalar or pseudo-scalar mediator. The only interaction terms with kaons and nucleons that contribute to the shift are:

$$\mathcal{L}_S = \frac{g_N^s}{\Lambda}\phi\bar{N}N + g_K^s\frac{m_K^2}{\Lambda}\phi K^+K^- + \frac{g_K^d}{\Lambda}\phi\partial_\mu K^+\partial^\mu K^-$$

where Λ is a UV mass scale. Note that if ϕ is a pseudo-scalar the Lagrangian violates CP.

The new potential is:

$$V(\boldsymbol{r}) = 2g_N^s(g_K^s+g_K^d)\frac{m_K}{\Lambda^2}\frac{e^{-m_\phi r}}{16\pi r} - g_N^s g_K^d\left(\frac{m_\phi}{m_K}\right)^2\frac{m_K}{\Lambda^2}\frac{e^{-m_\phi r}}{16\pi r} + g_N^s g_K^d\frac{\delta^3(\boldsymbol{r})}{4\Lambda^2 m_K}$$

The corresponding energy shift is:

$$\delta E_n^\phi = g_N^s\left[2(g_K^s+g_K^d) - g_K^d\left(\frac{m_\phi}{m_K}\right)^2\right]\frac{m_K}{4\Lambda^2}Y_n^\phi$$

Generalization to arbitrary nuclei

spin-independent case:

$$g_{SI} = Z g_p + (A - Z) g_n$$

spin dependent case:

$$g_{SD} = b_p g_p + b_n g_n$$

where $b_{p,n}$ are the fraction of the nuclear spin carried by the neutrons and protons in the specific nucleus.

Delaunay et al. Ann.Rev.Nucl.Part.Sci. 76 (2026)

Table of Contents

1. Motivations for Exotic Atoms as New Physics Probes
2. Shift in Exotic Atoms' Spectra
3. SIDDHARTA-2 Experimental Setup
4. Original Bounds on New Physics Models

SIDDHARTA-2 Experiment

SISSA

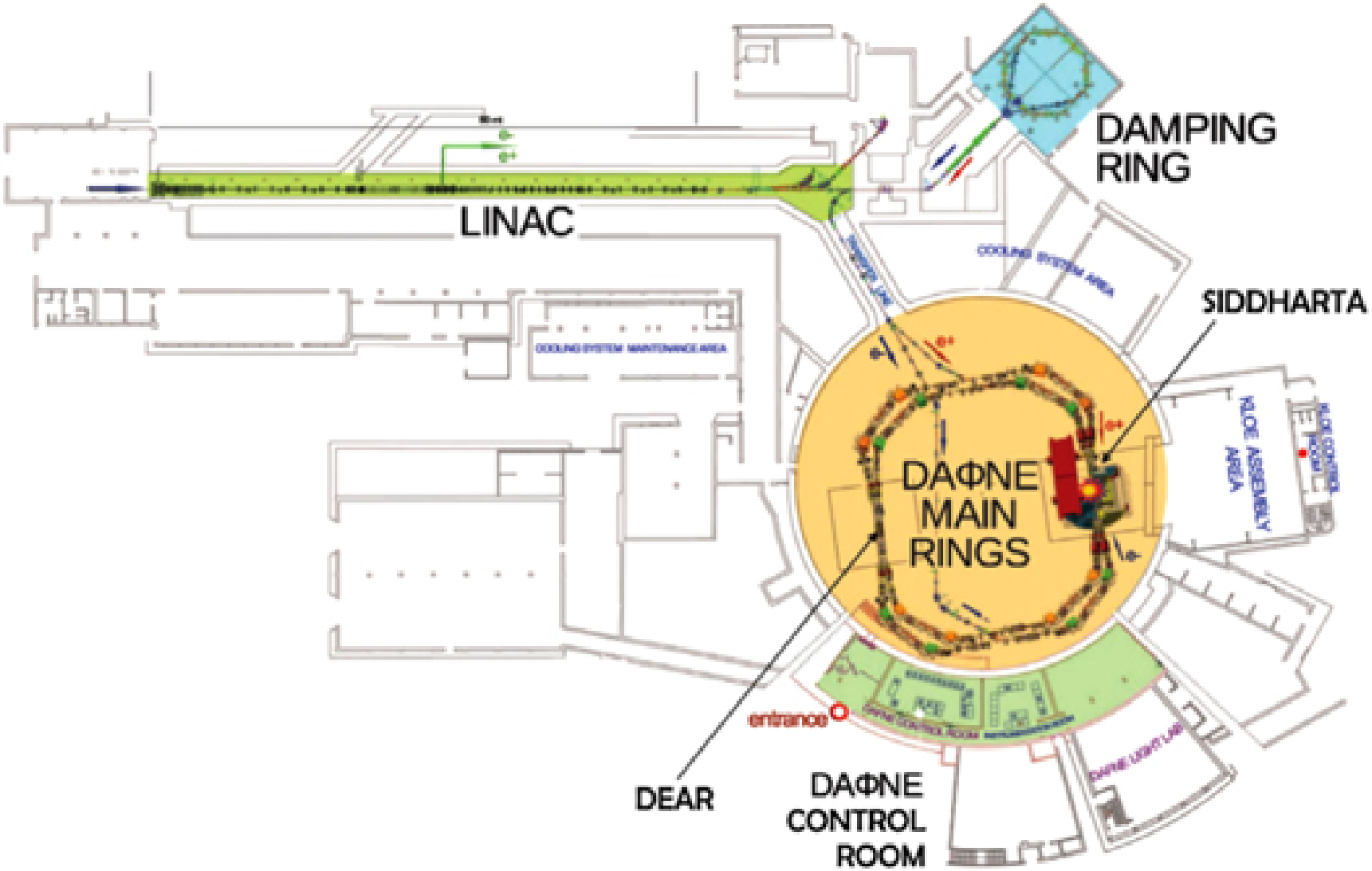

DAΦNE accelerator complex with its main rings, the damping ring and the linear accelerator, LINAC at the National Laboratories of Frascati of INFN
Curceanu et al, Rev. Mod. Phys. 91, 025006

SIDDHARTA-2 Experiment

SISSA

Sirghi, Iliescu, Sgaramella et al. (2025), 2605.26979v1

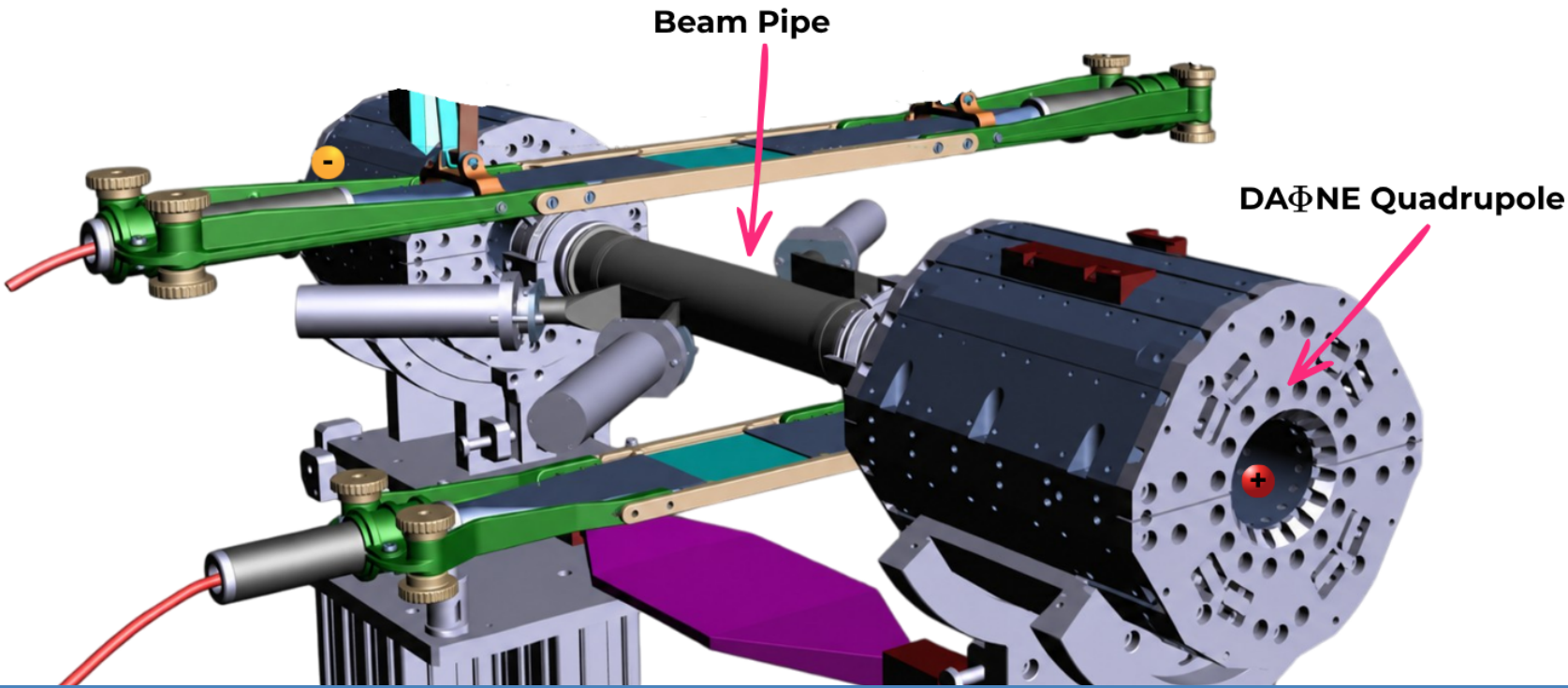

SIDDHARTA-2 Experiment

SISSA

Sirghi, Iliescu, Sgaramella et al. (2025), 2605.26979v1

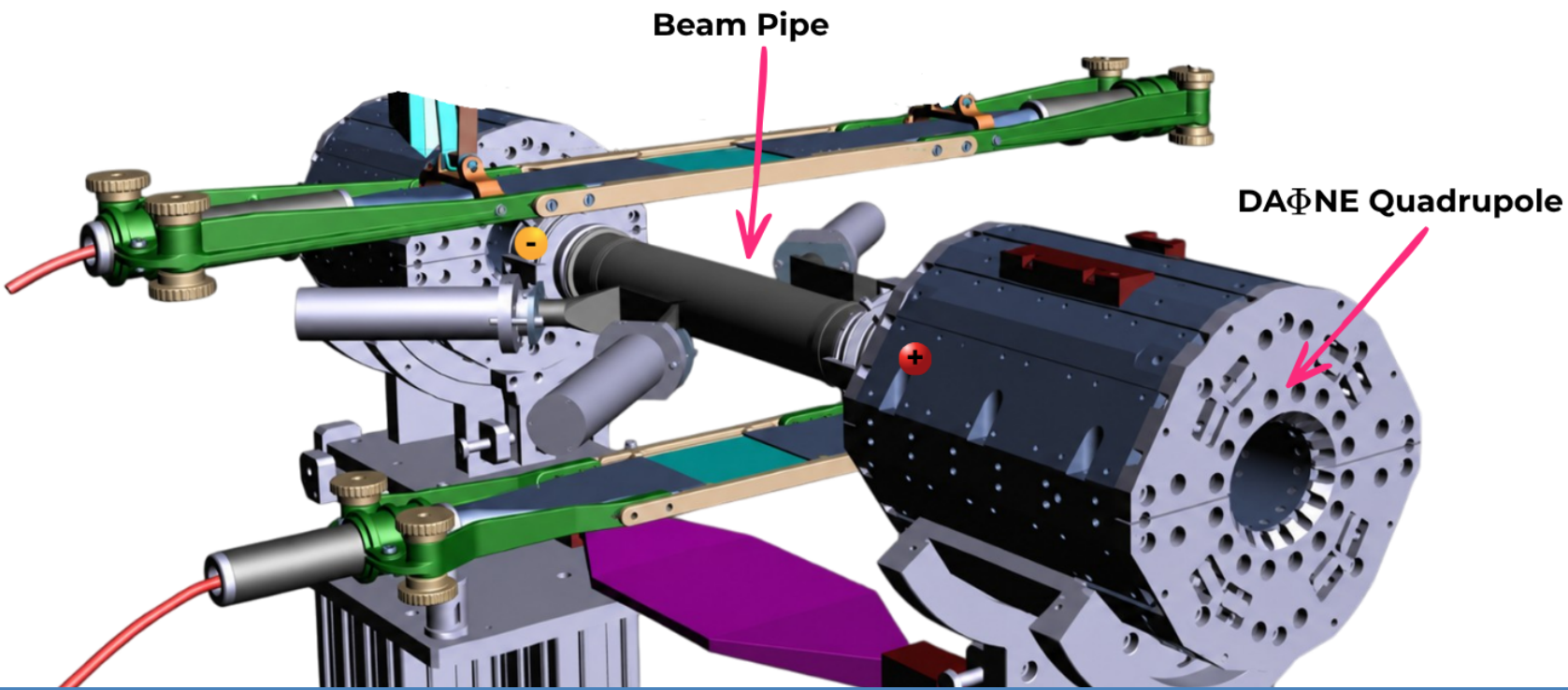

SIDDHARTA-2 Experiment

SISSA

Sirghi, Iliescu, Sgaramella et al. (2025), 2605.26979v1

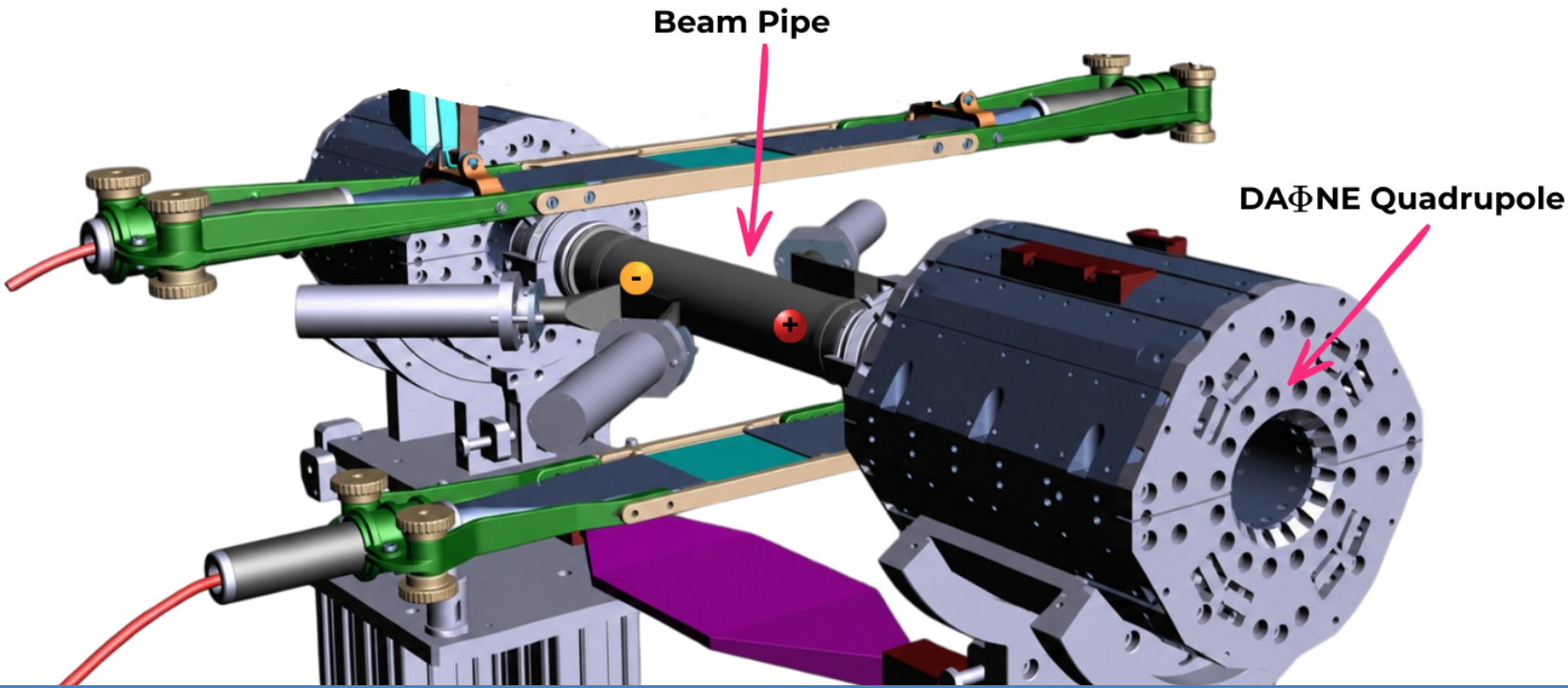

SIDDHARTA-2 Experiment

SISSA

Sirghi, Iliescu, Sgaramella et al. (2025), 2605.26979v1

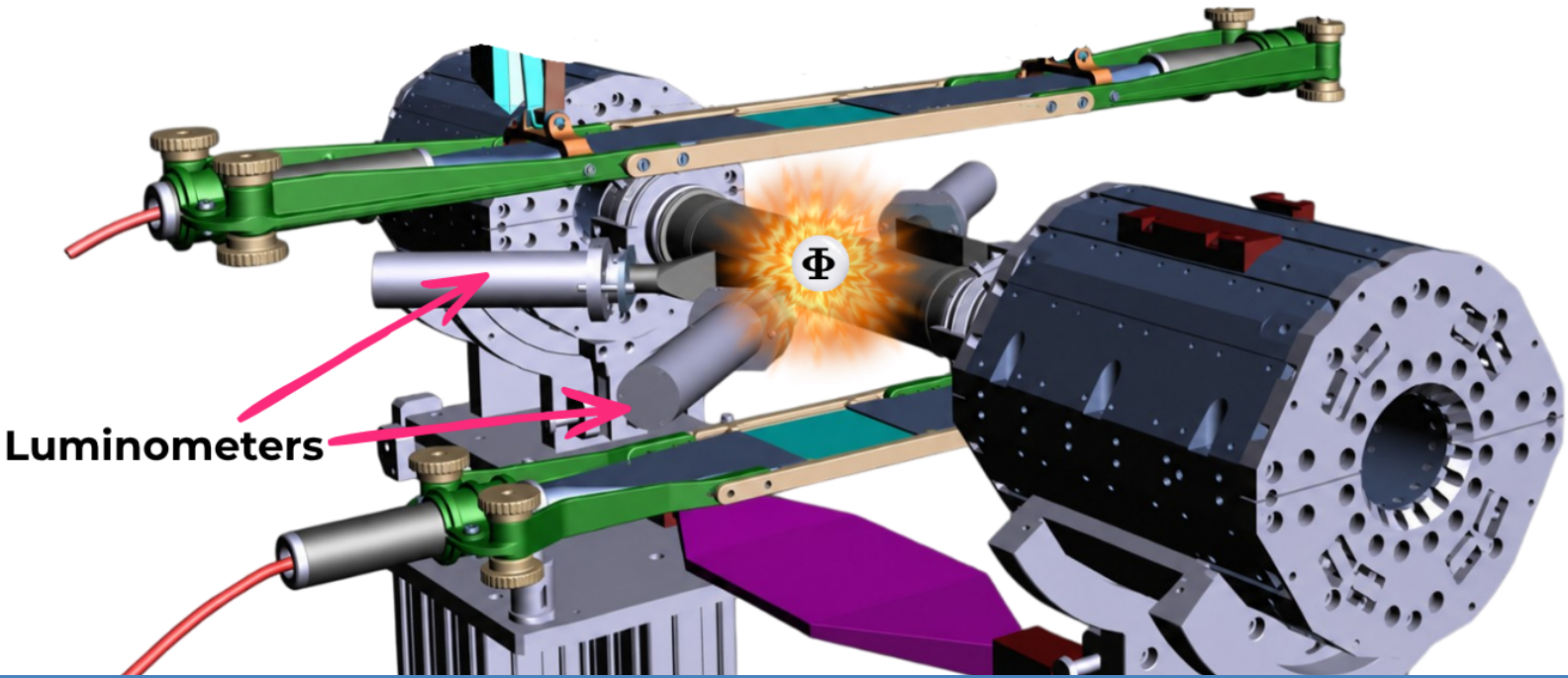

SIDDHARTA-2 Experiment

SISSA

Sirghi, Iliescu, Sgaramella et al. (2025), 2605.26979v1

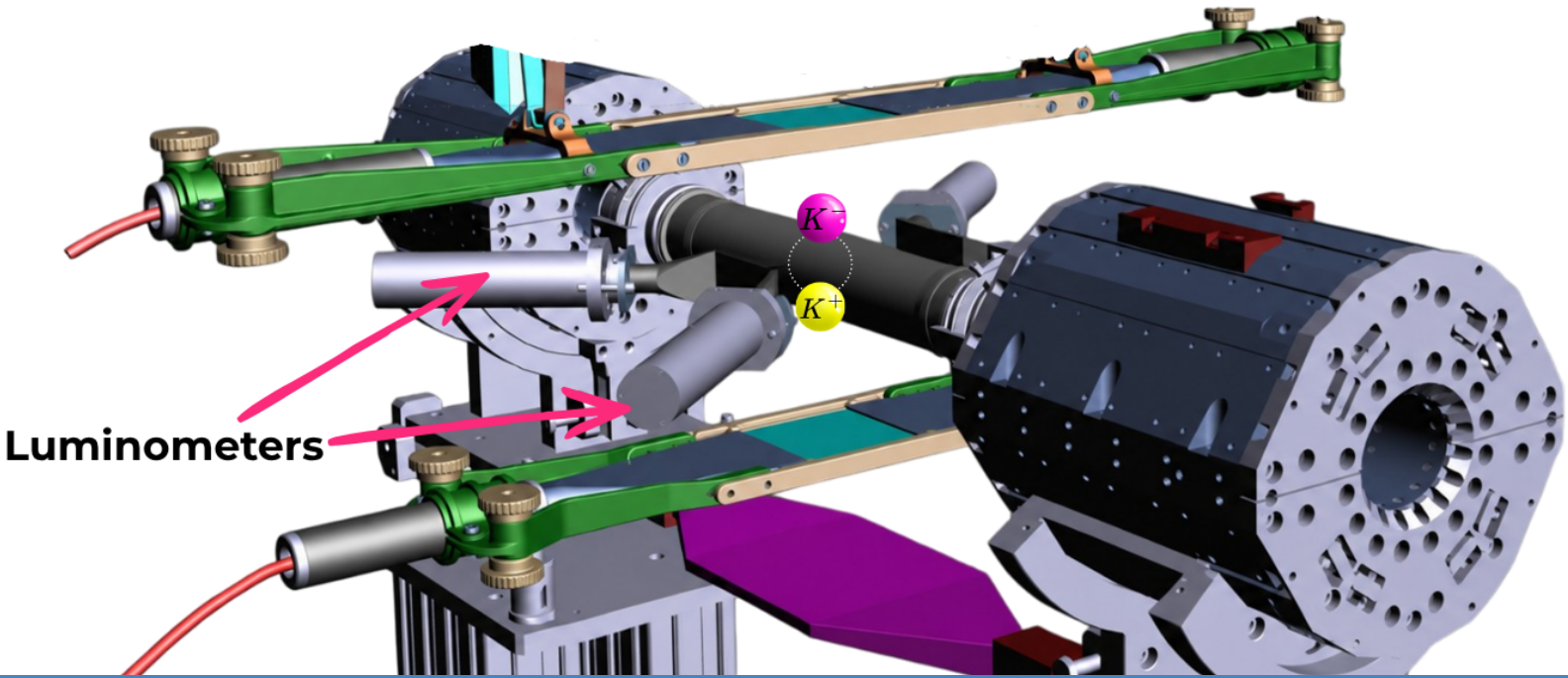

SIDDHARTA-2 Experiment

SISSA

Sirghi, Iliescu, Sgaramella et al. (2025), 2605.26979v1

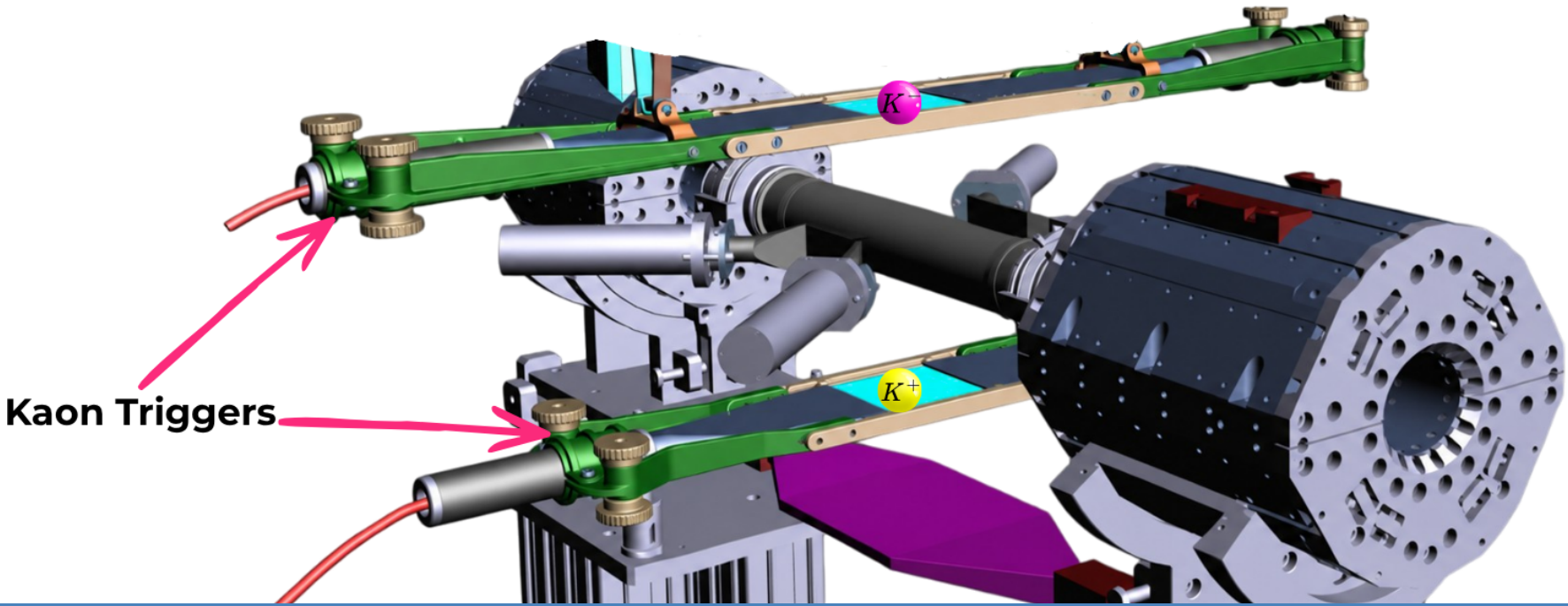

SIDDHARTA-2 Experiment

SISSA

Sirghi, Iliescu, Sgaramella et al. (2025), 2605.26979v1

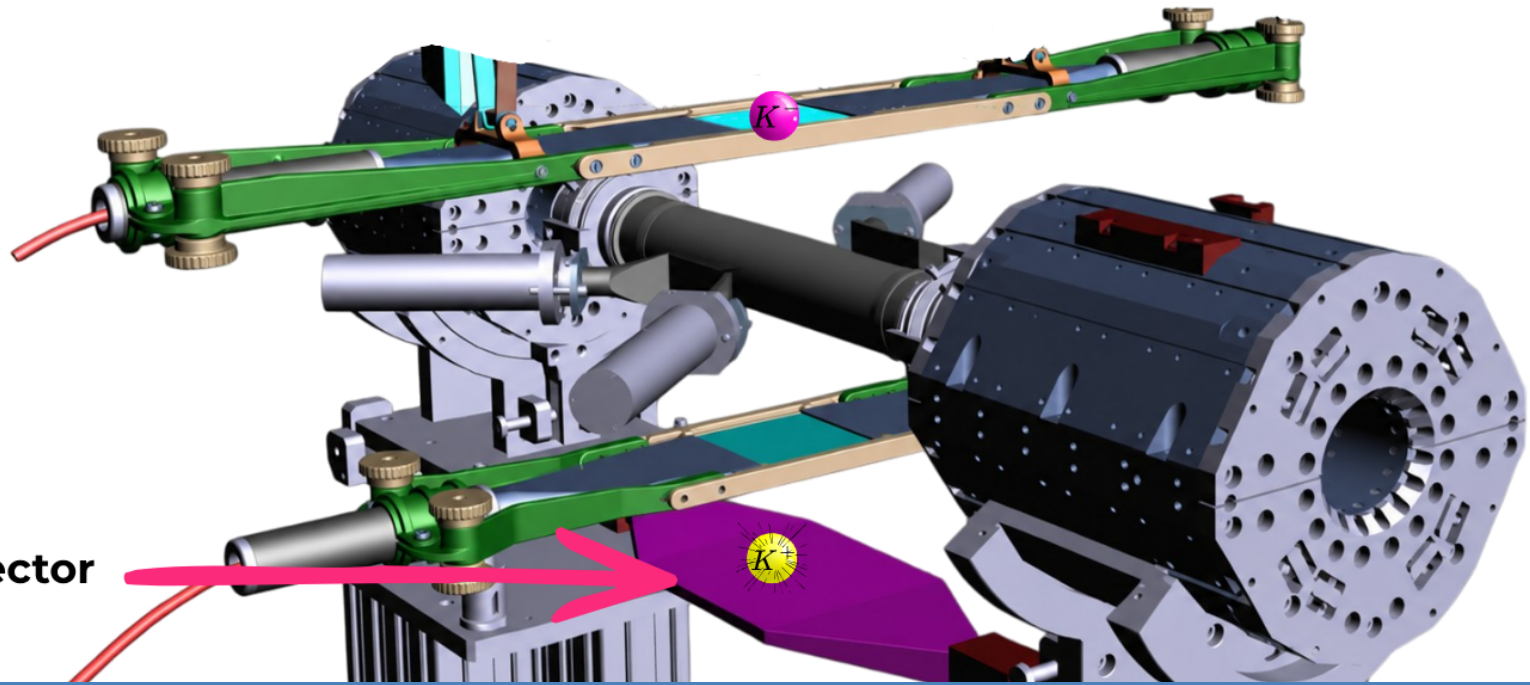

SIDDHARTA-2 Experiment

SISSA

Sirghi, Iliescu, Sgaramella et al. (2025), 2605.26979v1

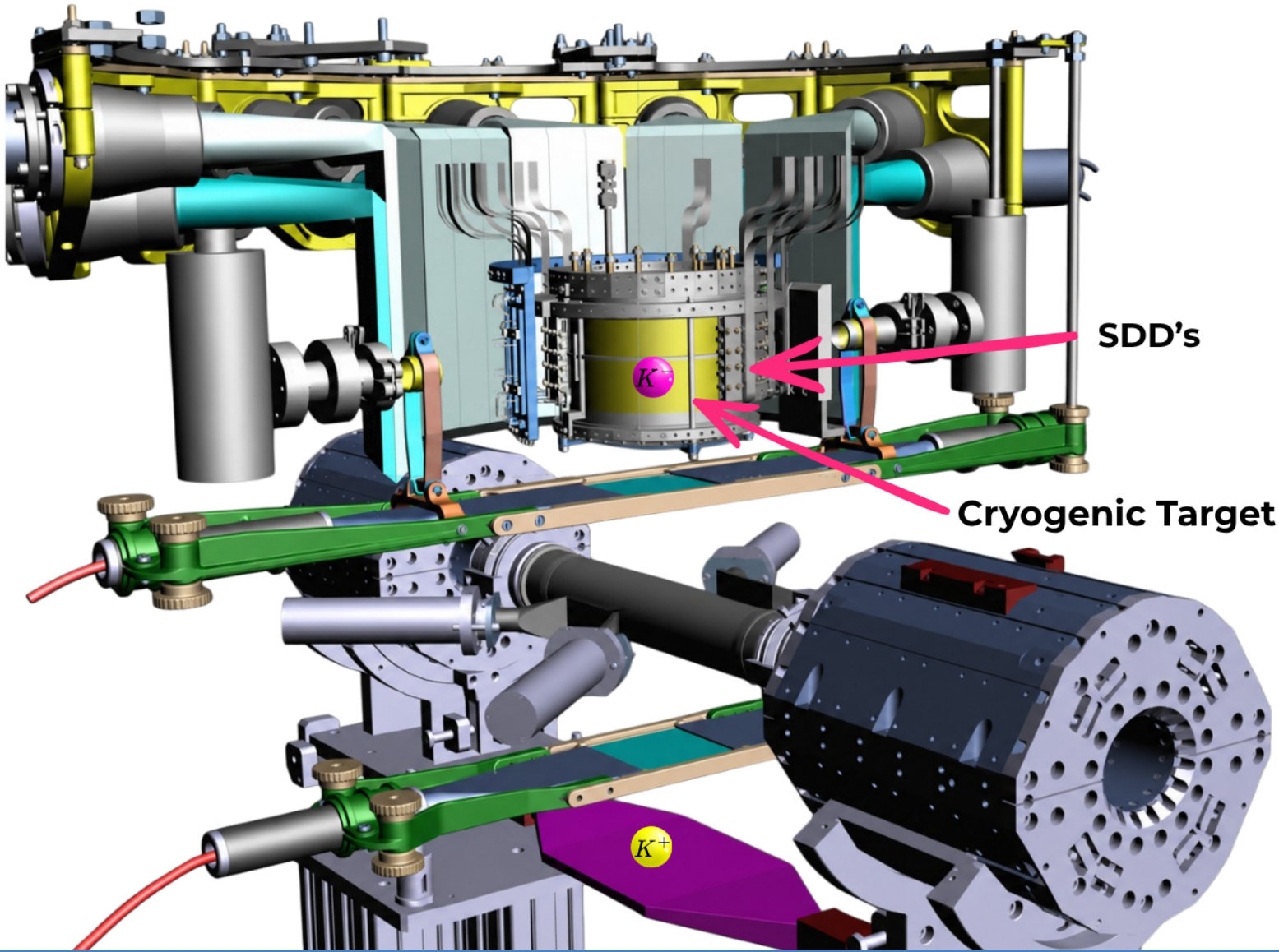

Table of Contents

1. Motivations for Exotic Atoms as New Physics Probes
2. Shift in Exotic Atoms' Spectra
3. SIDDHARTA-2 Experimental Setup
4. Original Bounds on New Physics Models

Scalar Exchange: *uds*-scalar model

SISSA

$$\mathcal{L}^{\text{int}}_{uds} = \frac{\phi}{f_\phi} \sum_{q=u,d,s} m_q \bar{q} q$$

Scalar Exchange: *uds*-scalar model

$$\mathcal{L}^{\text{int}}_{uds} = \frac{\phi}{f_\phi} \sum_{q=u,d,s} m_q \bar{q} q$$

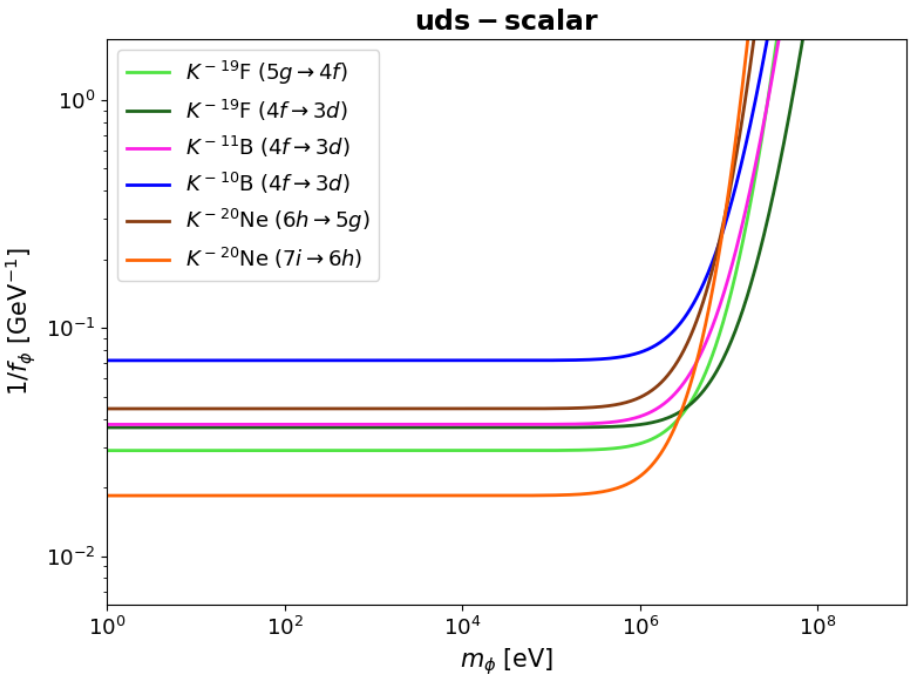

Scalar Exchange: *uds*-scalar model

$$\mathcal{L}^{\text{int}}_{uds} = \frac{\phi}{f_\phi} \sum_{q=u,d,s} m_q \bar{q} q$$

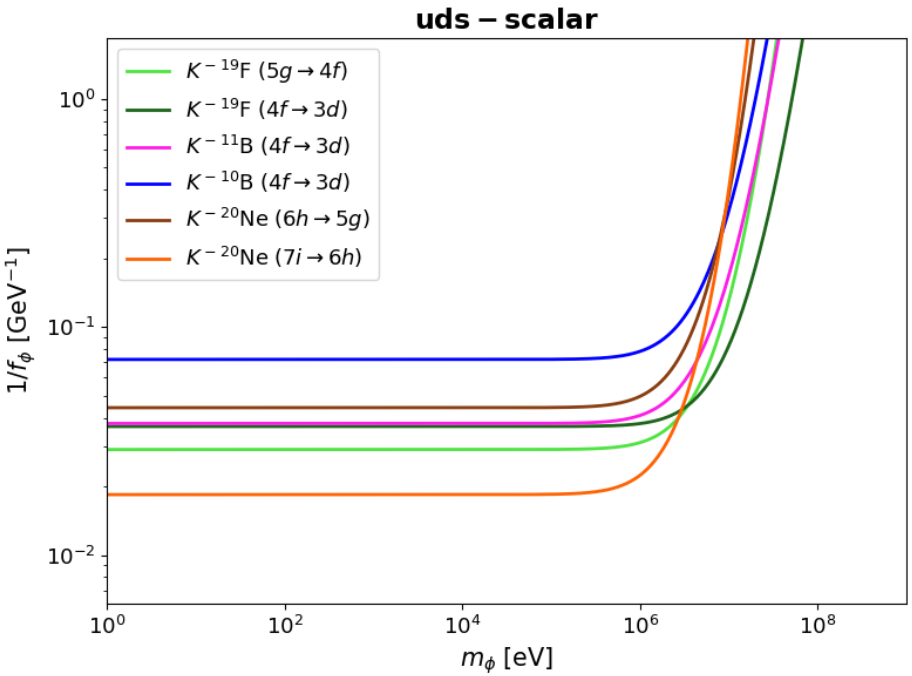

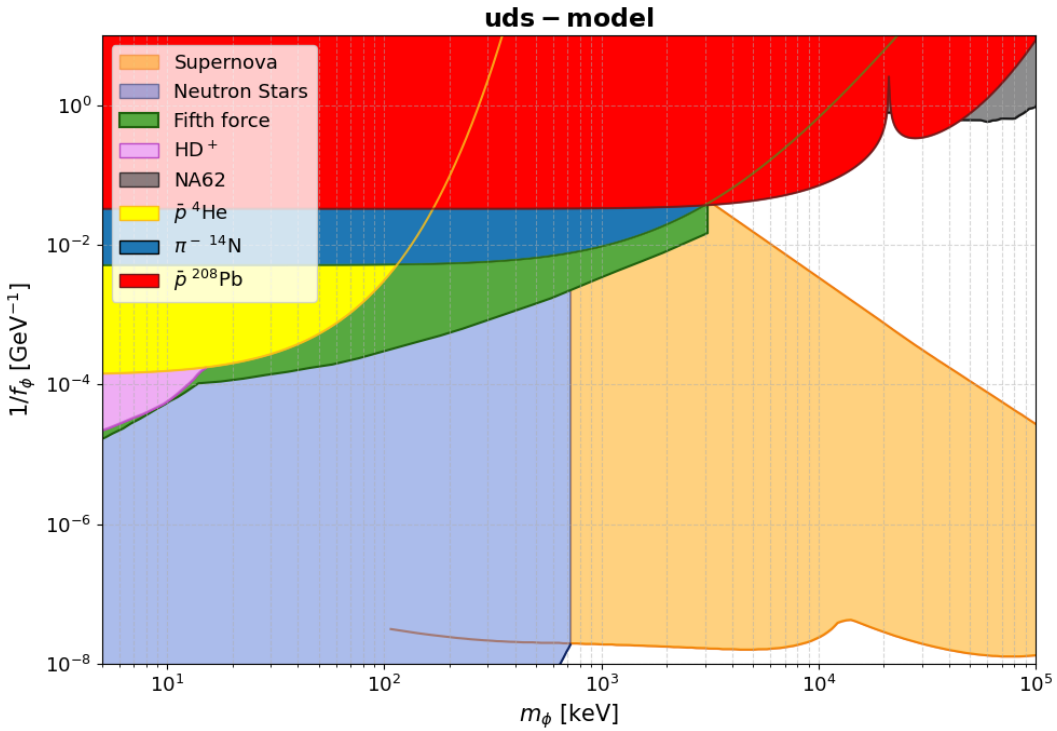

Scalar Exchange: *uds*-scalar model

$$\mathcal{L}^{\text{int}}_{uds} = \frac{\phi}{f_\phi} \sum_{q=u,d,s} m_q \bar{q} q$$

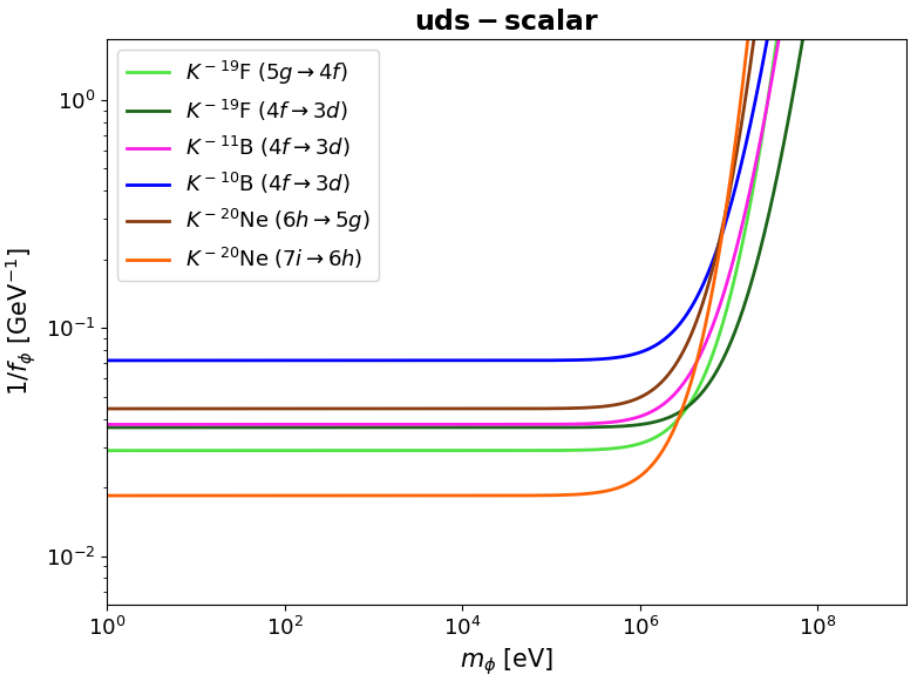

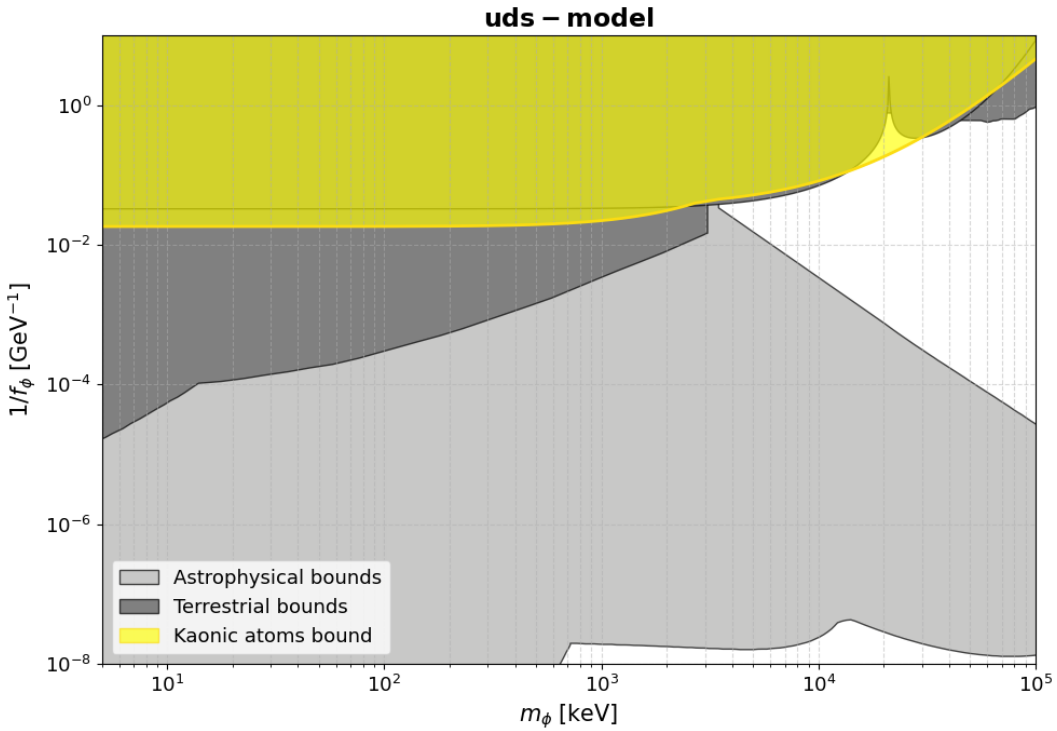

Pseudo-Scalar Exchange: ALP

$$\mathcal{L}^{\text{QCD}}_{\text{ALP}} = \frac{1}{2}\partial_\mu a \partial^\mu a - \frac{1}{2} m_a^2 a^2 + g_s^2 \frac{\tilde{C}_g}{\Lambda} a G^b_{\mu\nu} \tilde{G}^{b\mu\nu} + \frac{\partial_\mu a}{\Lambda} \bar{q} \gamma^\mu Y_P \gamma_5 q + \\ + g_s^2 \frac{C_g}{\Lambda} a G^b_{\mu\nu} G^{b\mu\nu} + \frac{v}{\Lambda} a \bar{q} y_S q + \mathcal{O}\left(\frac{1}{\Lambda^2}\right)$$

Pseudo-Scalar Exchange: ALP

$$\mathcal{L}_{\text{ALP}}^{\text{QCD}} = \frac{1}{2}\partial_\mu a \partial^\mu a - \frac{1}{2} m_a^2 a^2 + g_s^2 \frac{\tilde{C}_g}{\Lambda} a G^b_{\mu\nu} \tilde{G}^{b\mu\nu} + \frac{\partial_\mu a}{\Lambda} \bar{q} \gamma^\mu Y_P \gamma_5 q +$$
$$+ g_s^2 \frac{C_g}{\Lambda} a G^b_{\mu\nu} G^{b\mu\nu} + \frac{v}{\Lambda} a \bar{q} y_S q + \mathcal{O}\left(\frac{1}{\Lambda^2}\right)$$

Pseudo-Scalar Exchange: ALP

$$\mathcal{L}_{\text{ALP}}^{\text{QCD}} = \frac{1}{2}\partial_\mu a \partial^\mu a - \frac{1}{2} m_a^2 a^2 + g_s^2 \frac{\tilde{C}_g}{\Lambda} a G^b_{\mu\nu} \tilde{G}^{b\mu\nu} + \frac{\partial_\mu a}{\Lambda} \bar{q} \gamma^\mu Y_P \gamma_5 q +$$
$$+ g_s^2 \frac{C_g}{\Lambda} a G^b_{\mu\nu} G^{b\mu\nu} + \frac{v}{\Lambda} a \bar{q} y_S q + \mathcal{O}\left(\frac{1}{\Lambda^2}\right)$$

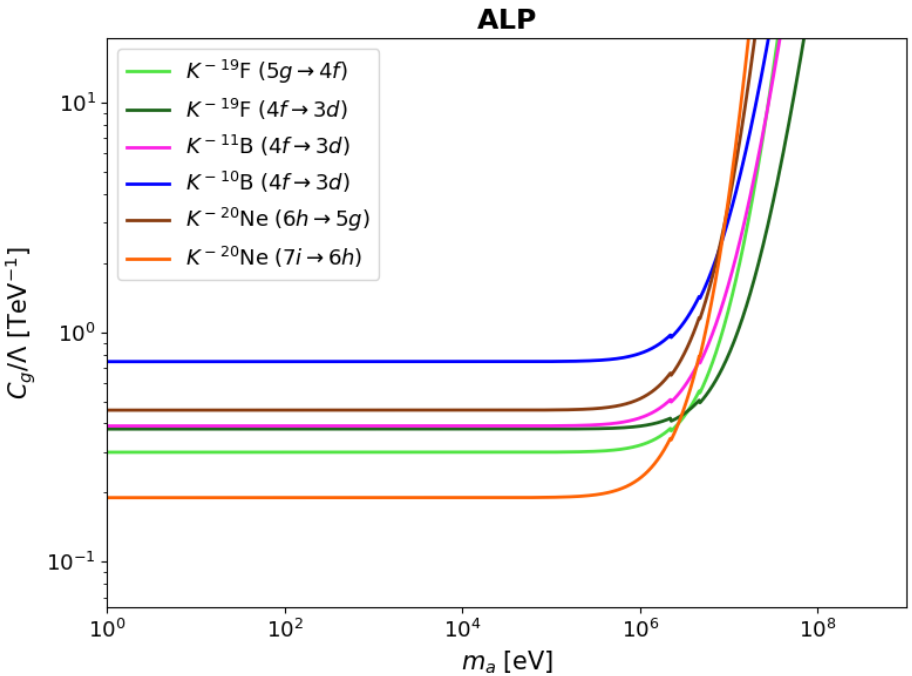

Pseudo-Scalar Exchange: ALP

$$\mathcal{L}^{\rm QCD}_{\rm ALP} = \frac{1}{2}\partial_\mu a \partial^\mu a - \frac{1}{2} m_a^2 a^2 + g_s^2 \frac{\tilde{C}_g}{\Lambda} a G^b_{\mu\nu} \tilde{G}^{b\mu\nu} + \frac{\partial_\mu a}{\Lambda} \bar{q}\gamma^\mu Y_P \gamma_5 q + \\ + g_s^2 \frac{C_g}{\Lambda} a G^b_{\mu\nu} G^{b\mu\nu} + \frac{v}{\Lambda} a \bar{q} y_S q + \mathcal{O}\left(\frac{1}{\Lambda^2}\right)$$

$$\mathcal{L}^{\rm QCD}_{\rm ALP} \supset g_s^2 \frac{C_g}{\Lambda} a G^b_{\mu\nu} G^{b\mu\nu} \longrightarrow \mathcal{L}^{\chi}_{\rm ALP} \supset g^s_{aN} a \bar{N} N$$

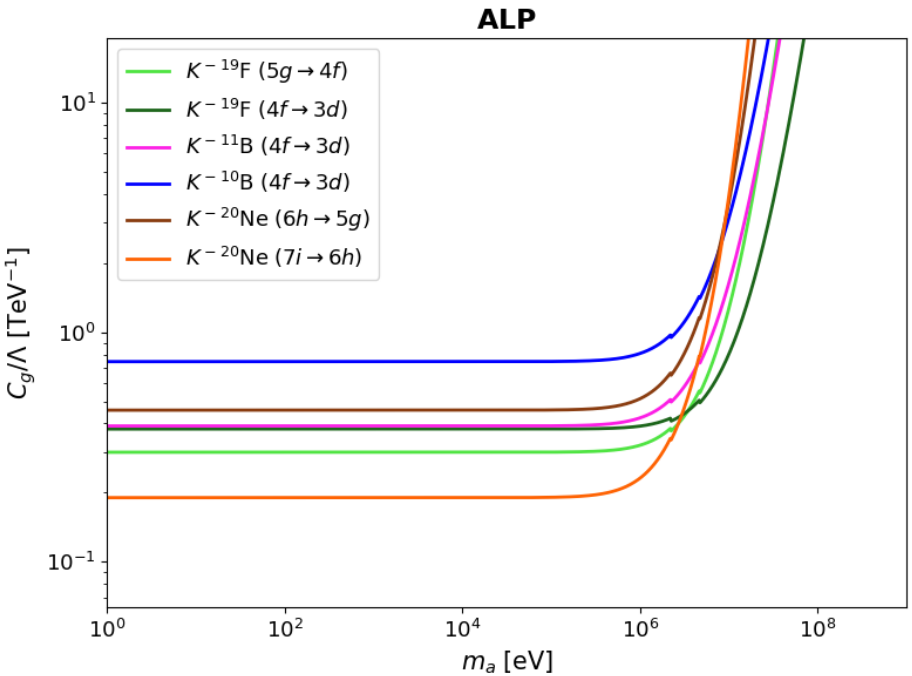

Pseudo-Scalar Exchange: ALP

SISSA

$$\mathcal{L}^{\text{QCD}}_{\text{ALP}} = \frac{1}{2}\partial_\mu a \partial^\mu a - \frac{1}{2} m_a^2 a^2 + g_s^2 \frac{\tilde{C}_g}{\Lambda} a G^b_{\mu\nu} \tilde{G}^{b\mu\nu} + \frac{\partial_\mu a}{\Lambda} \bar{q}\gamma^\mu Y_P \gamma_5 q + \\ + g_s^2 \frac{C_g}{\Lambda} a G^b_{\mu\nu} G^{b\mu\nu} + \frac{v}{\Lambda} a \bar{q} y_S q + \mathcal{O}\left(\frac{1}{\Lambda^2}\right)$$

$$\mathcal{L}^{\text{QCD}}_{\text{ALP}} \supset g_s^2 \frac{C_g}{\Lambda} a G^b_{\mu\nu} G^{b\mu\nu} \longrightarrow \mathcal{L}^{\chi}_{\text{ALP}} \supset g^s_{aN} a \bar{N} N$$

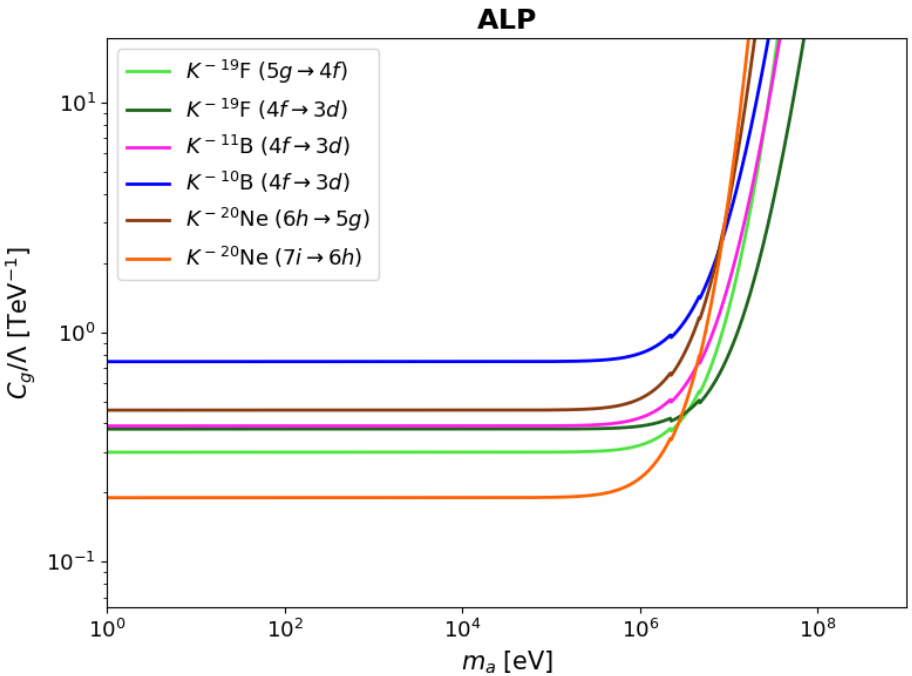

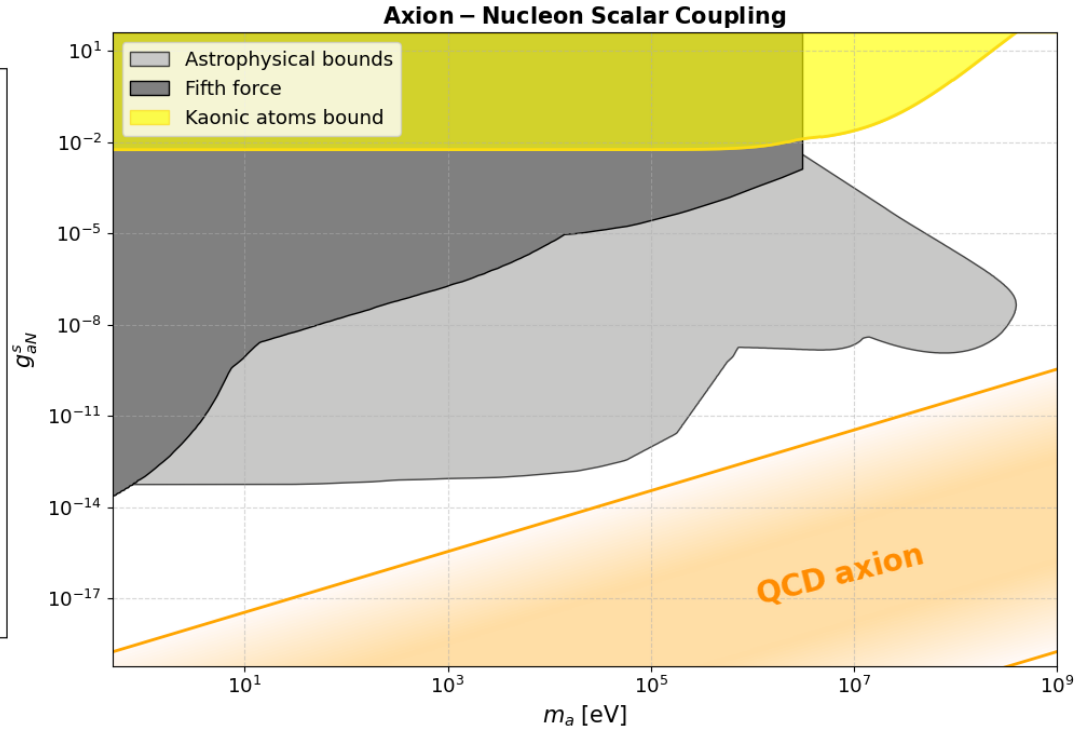

Vector Exchange: Dark Photon

$$\mathcal{L}^{\text{int}}_{A'} = \sum_f \varepsilon e Q_f \bar{f} \gamma^\mu f A'_\mu$$

with Q_f the electric charge of the fermion f.

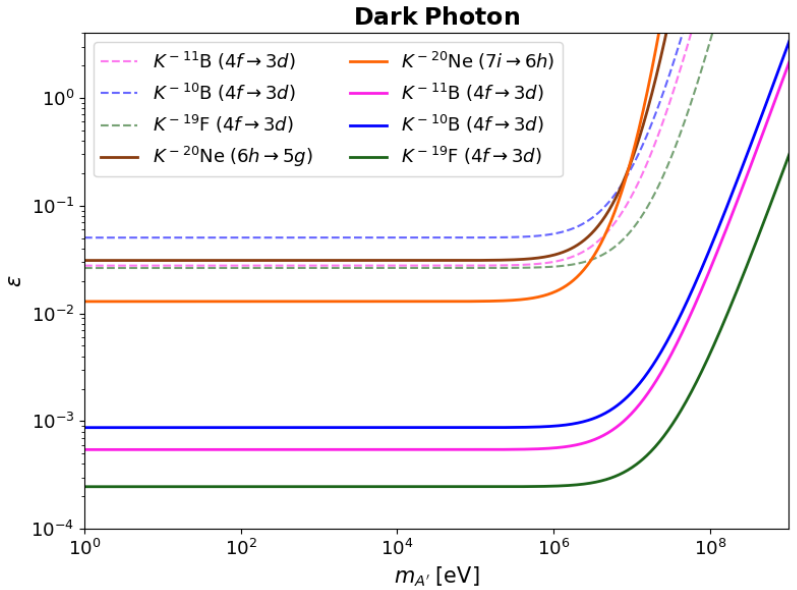

Vector Exchange: Dark Photon

$$\mathcal{L}^{\text{int}}_{A'} = \sum_f \varepsilon e Q_f \bar{f} \gamma^\mu f A'_\mu$$

with Q_f the electric charge of the fermion f.

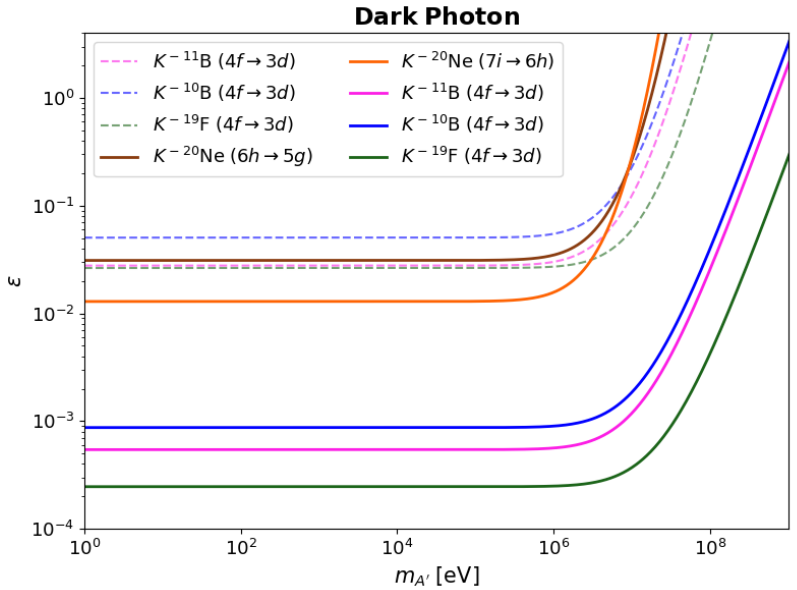

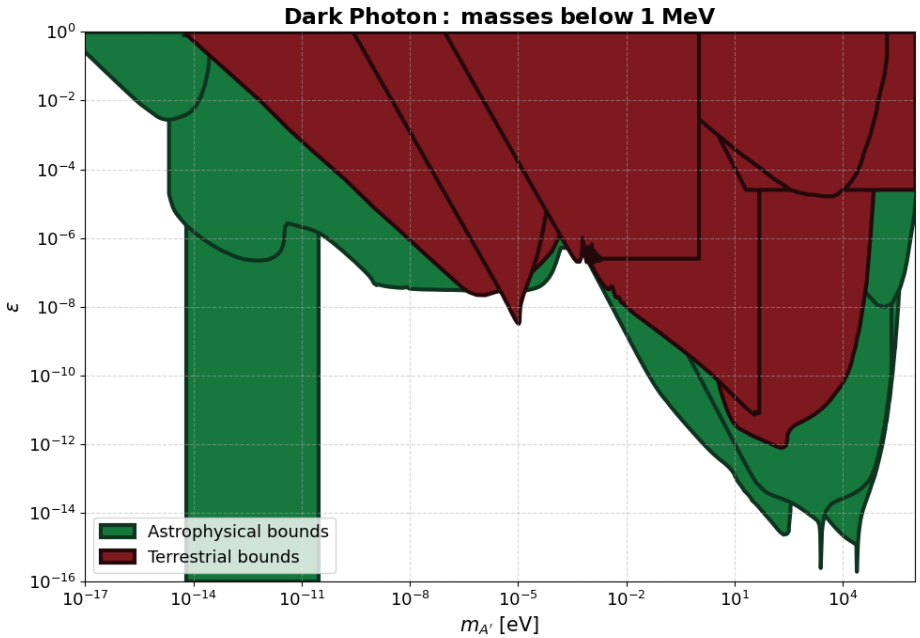

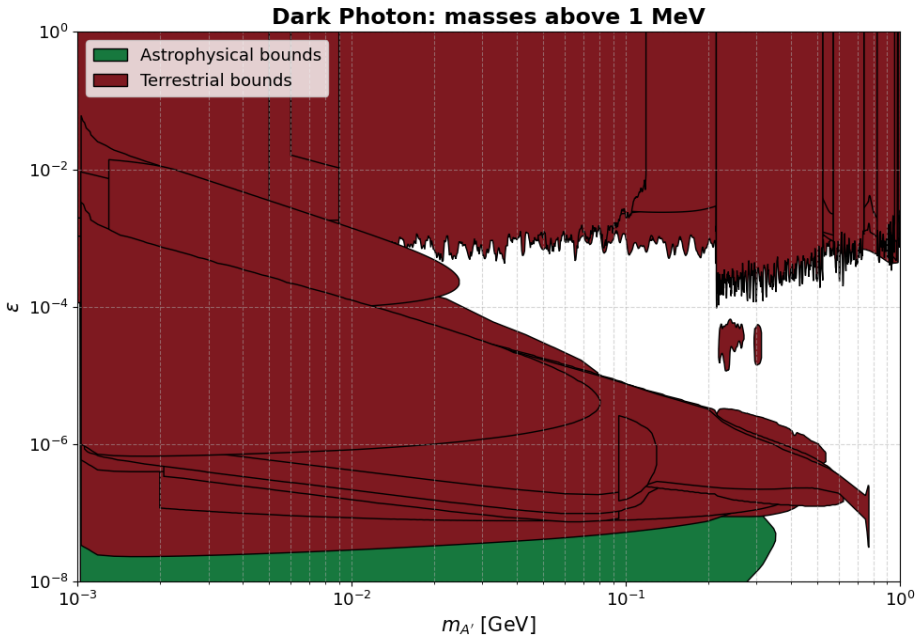

Vector Exchange: Dark Photon

$$\mathcal{L}^{\text{int}}_{A'} = \sum_f \varepsilon e Q_f \bar{f} \gamma^\mu f A'_\mu$$

with Q_f the electric charge of the fermion f.

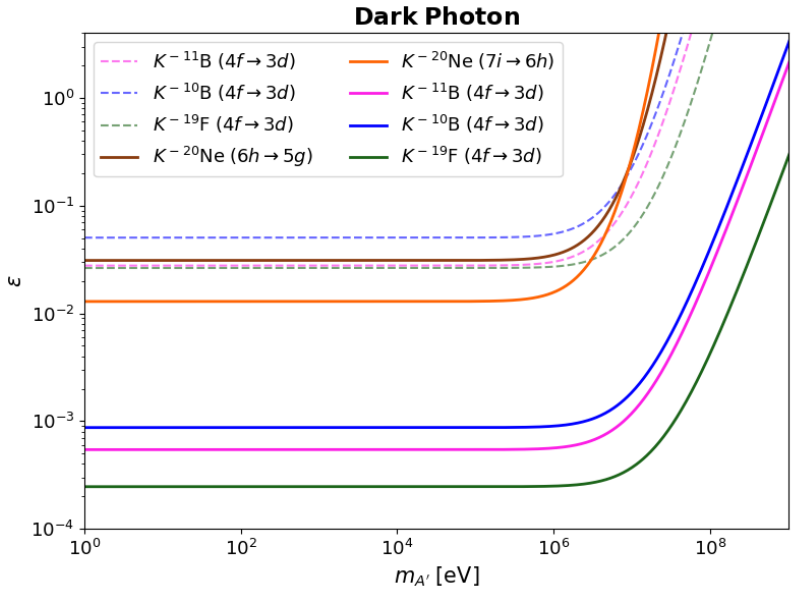

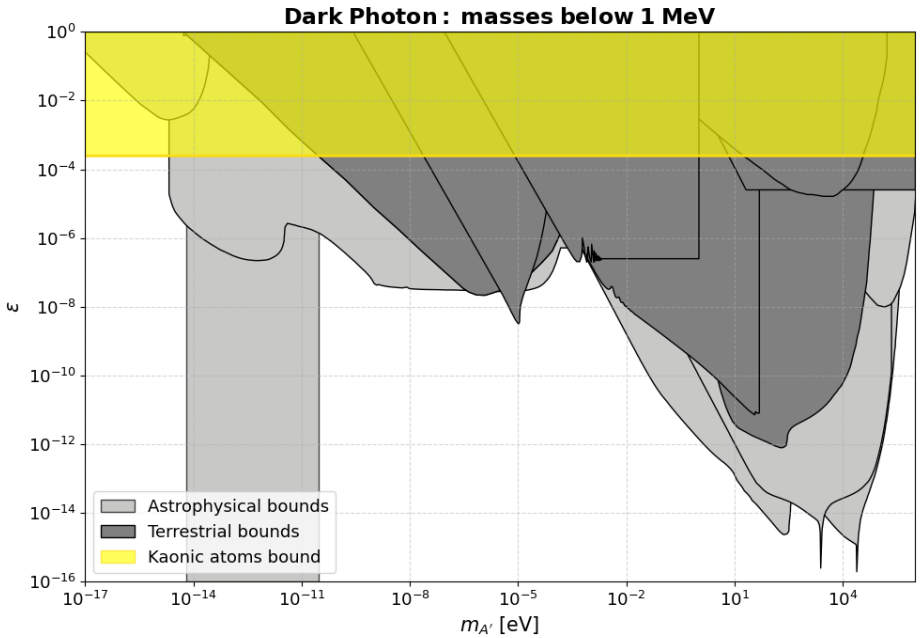

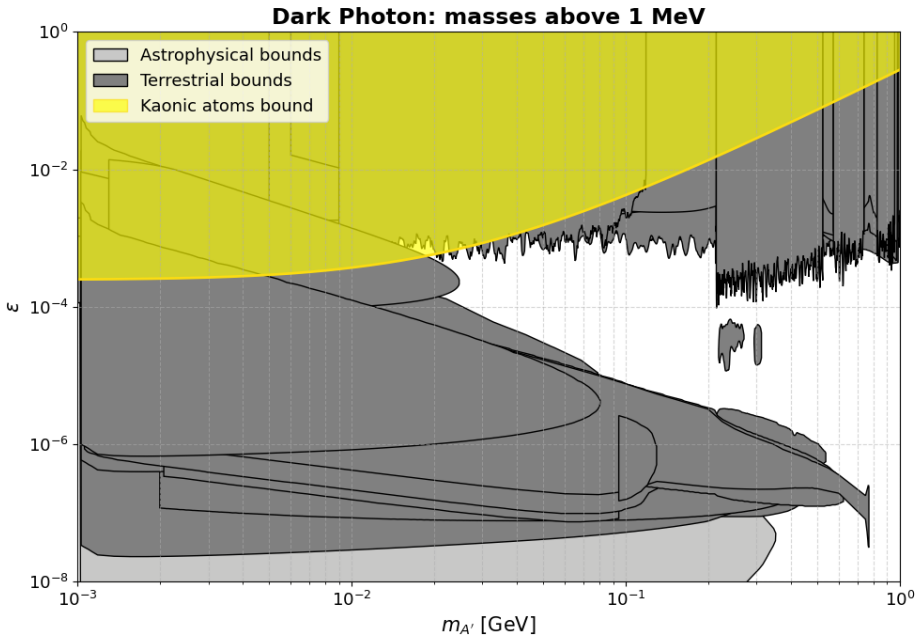

Protophobic model

$$\mathcal{L}_X^{int} = geX_\mu \bar{n}\gamma^\mu n + igeX_\mu(K^+\partial^\mu K^- - K^-\partial^\mu K^+)$$

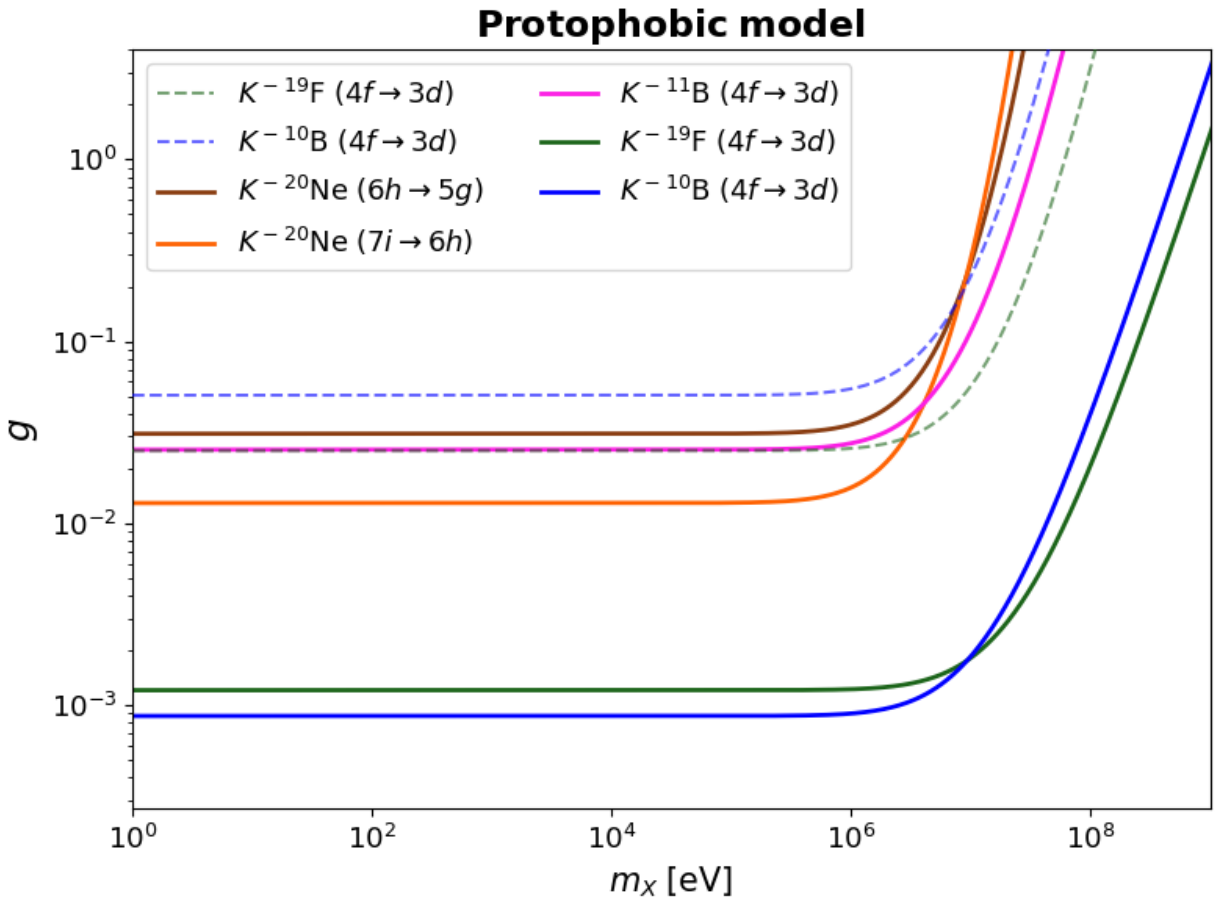

Protophobic model

SISSA

$$\mathcal{L}_X^{int} = geX_\mu \bar{n}\gamma^\mu n + igeX_\mu(K^+\partial^\mu K^- - K^-\partial^\mu K^+)$$

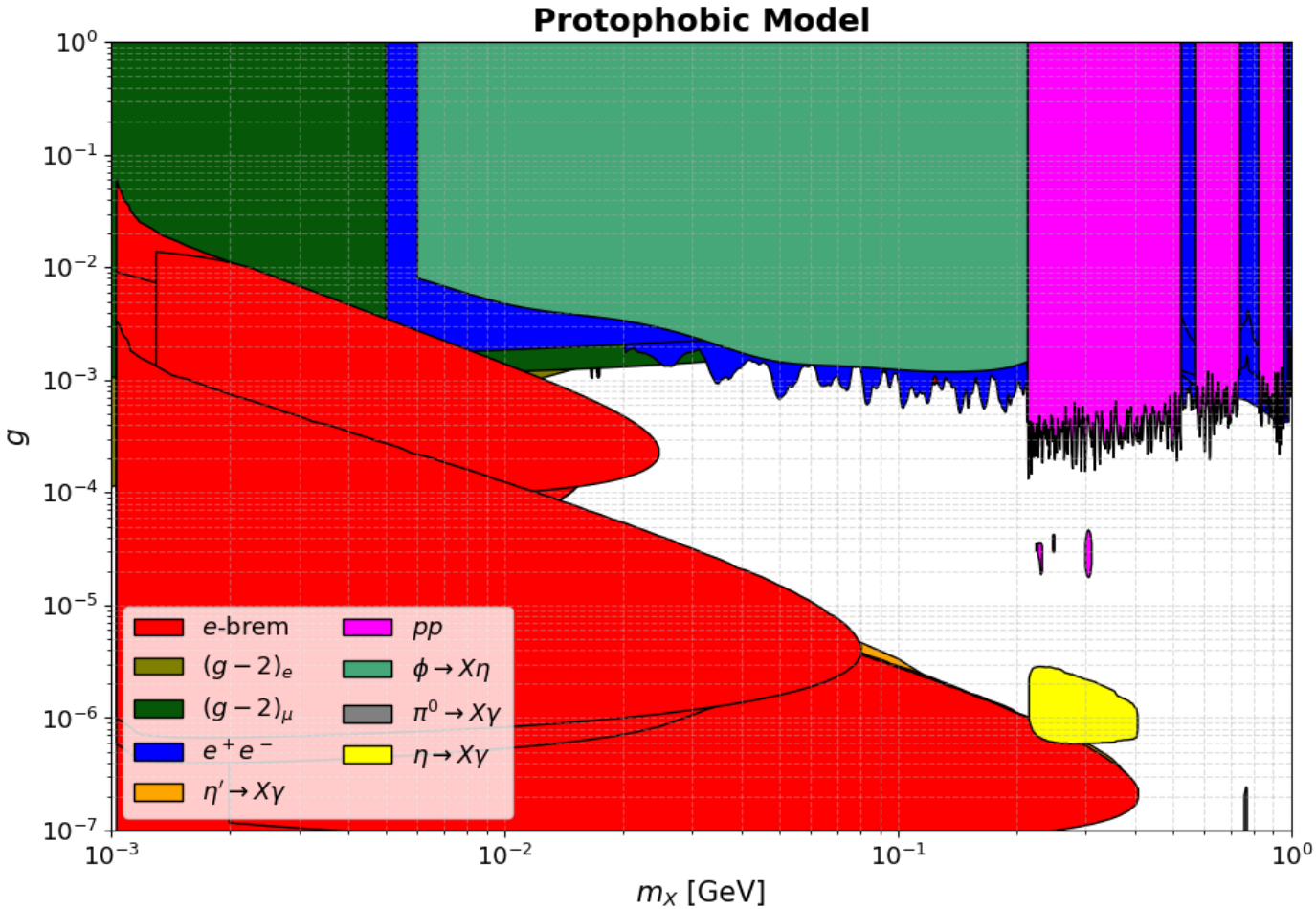

Protophobic model

$$\mathcal{L}_X^{int} = geX_\mu \bar{n}\gamma^\mu n + igeX_\mu(K^+\partial^\mu K^- - K^-\partial^\mu K^+)$$

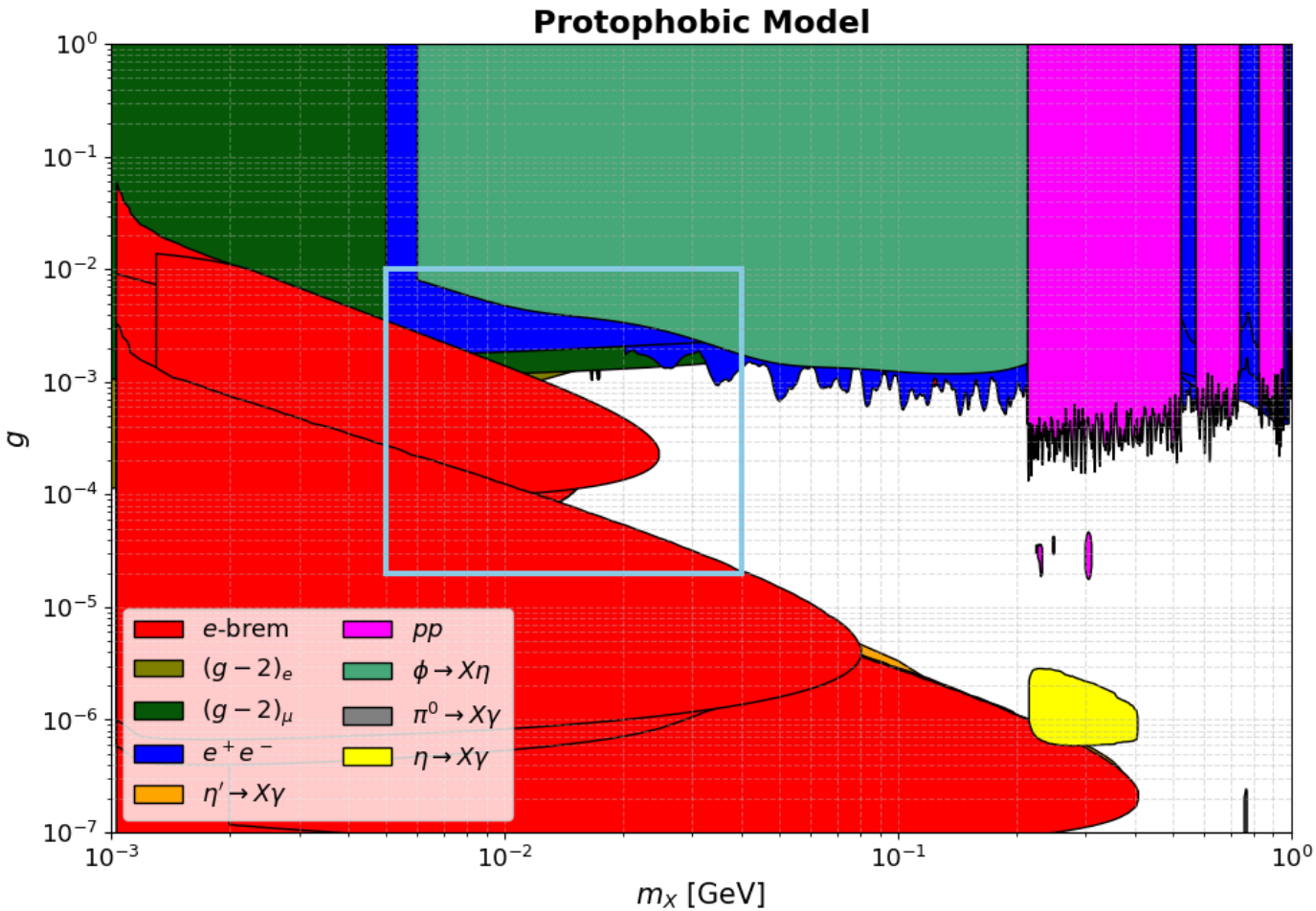

Protophobic model

$$\mathcal{L}_X^{int} = geX_\mu \bar{n}\gamma^\mu n + igeX_\mu(K^+\partial^\mu K^- - K^-\partial^\mu K^+)$$

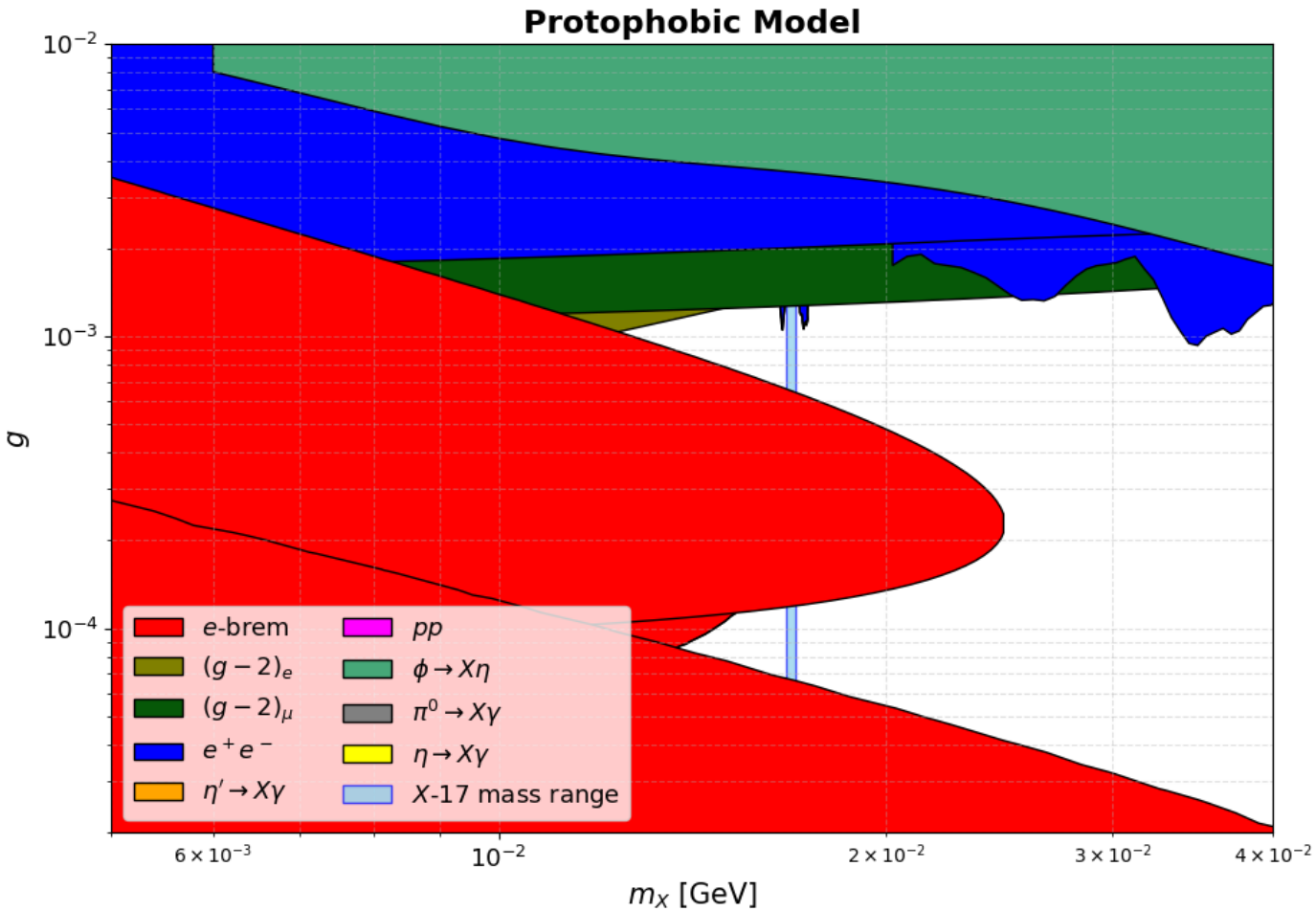

Protophobic model

$$\mathcal{L}_X^{int} = geX_\mu \bar{n}\gamma^\mu n + igeX_\mu (K^+\partial^\mu K^- - K^-\partial^\mu K^+)$$

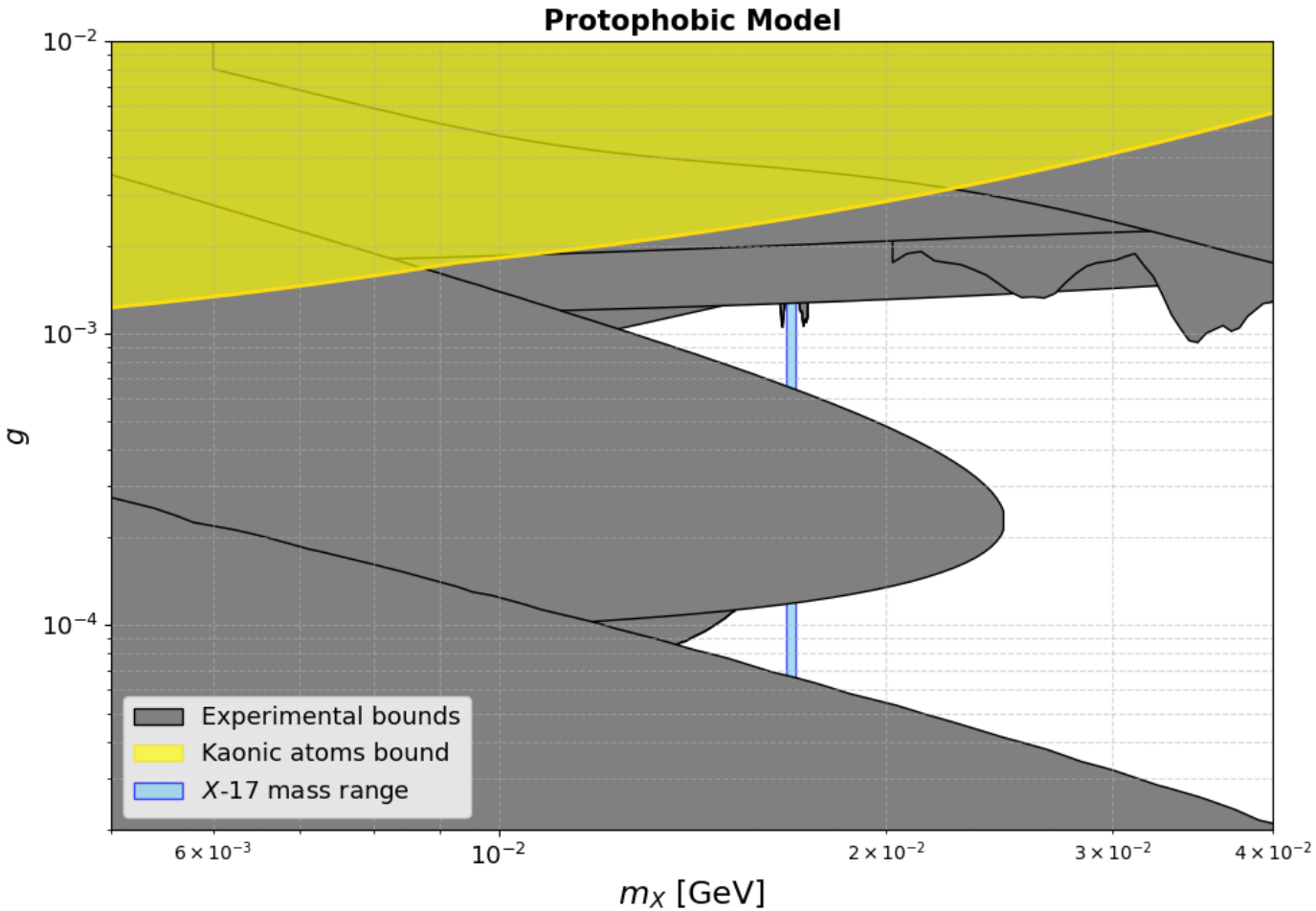

Protophobic model

$$\mathcal{L}_X^{int} = geX_\mu \bar{n}\gamma^\mu n + igeX_\mu(K^+\partial^\mu K^- - K^-\partial^\mu K^+)$$

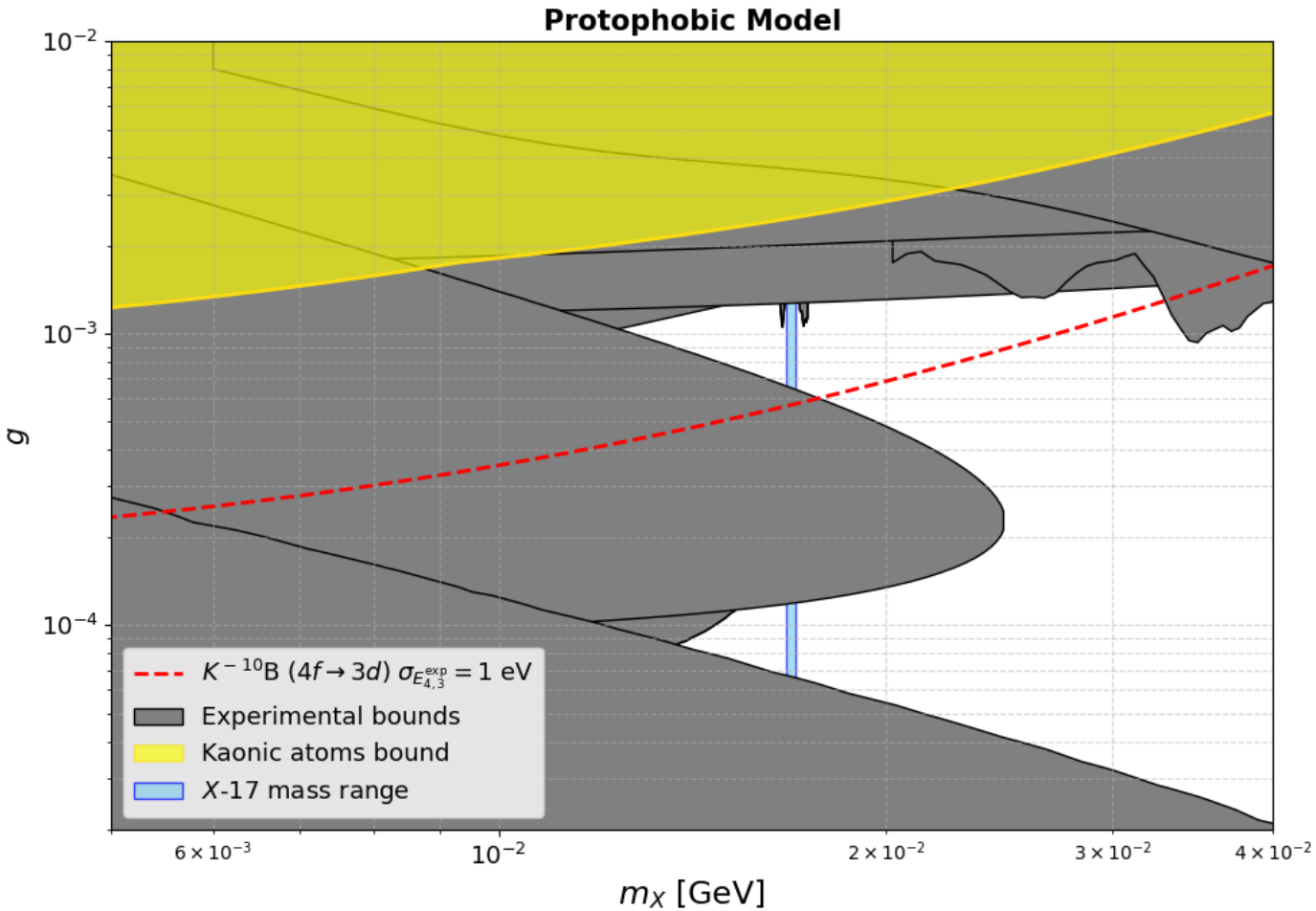

Conclusions

SISSA

To summarize, our approach was the following:

UV Lagrangian for models with new scalar, pseudo-scalar and vector bosons interacting with quarks and gluons

Conclusions

To summarize, our approach was the following:

UV Lagrangian for models with new scalar, pseudo-scalar and vector bosons interacting with quarks and gluons



Chiral Lagrangian with kaons and nucleons

Conclusions

To summarize, our approach was the following:

UV Lagrangian for models with new scalar, pseudo-scalar and vector bosons interacting with quarks and gluons



Chiral Lagrangian with kaons and nucleons



New potentials and corresponding energy shifts on the spectrum of kaonic atoms

Conclusions

To summarize, our approach was the following:

UV Lagrangian for models with new scalar, pseudo-scalar and vector bosons interacting with quarks and gluons

↓

Chiral Lagrangian with kaons and nucleons

↓

New potentials and corresponding energy shifts on the spectrum of kaonic atoms

↓

New bounds using the transitions probed by the SIDDHARTA-2 experiment

Upcoming measurements of kaonic transitions at J-PARC (Japan Proton Accelerator Research Complex) have the potential to improve our results.

Thank you!

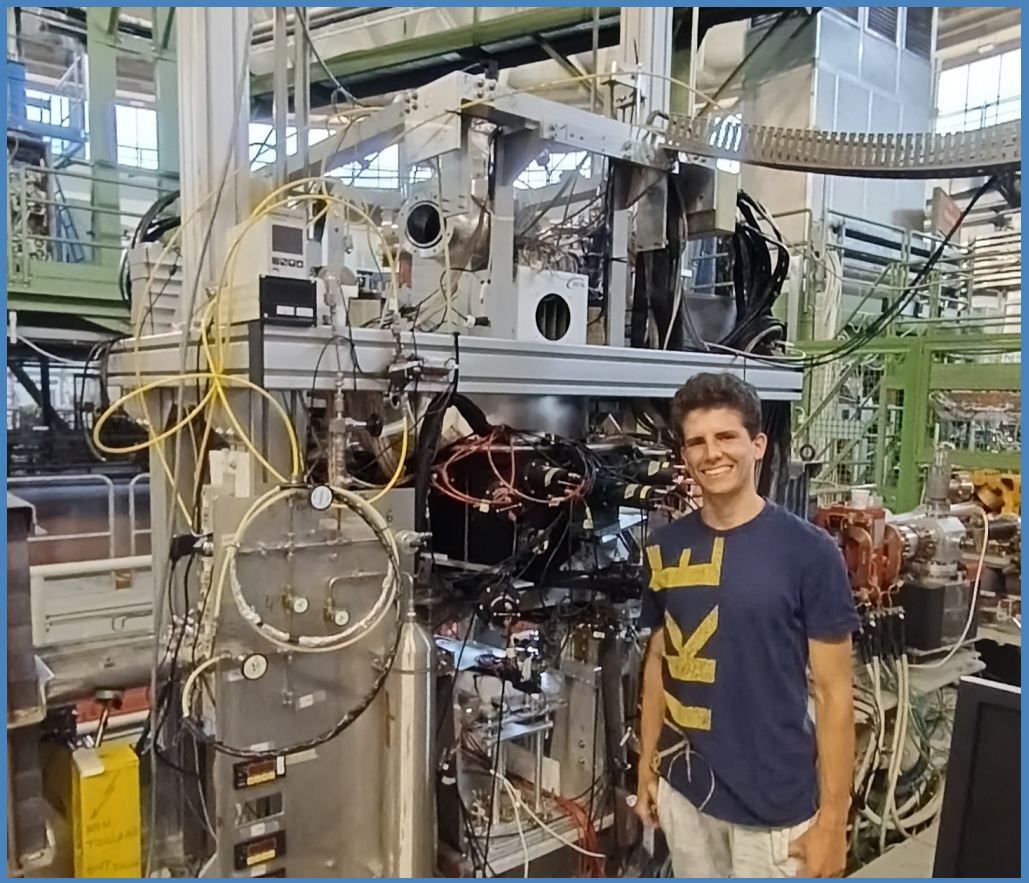

Human-scale comparison of the SIDDHARTA-2 setup

Backup: Transitions

SISSA

Bound-state	(n_i, n_f)	$E^{\rm exp}_{n_i,n_f}$[eV]	$E^{\rm calc}_{n_i,n_f}$[eV]	$\Delta_{n_i,n_f}/E^{\rm calc}_{n_i,n_f}$[ppm]	$E^{\rm Pol}_{n_i,n_f}/E^{\rm calc}_{n_i,n_f}$[ppm]
$K^-\,{}^{20}$Ne	$(9,8)$	4206.97 ± 3.97	4201.45	$(13 \pm 9) \times 10^2$	< 0.02
	$(8,7)$	6130.57 ± 1.63	6130.31	$\pm 3 \times 10^2$	< 0.06
	$(7,6)$	9450.23 ± 1.54	9450.28	$\pm 2 \times 10^2$	< 0.2
	$(6,5)$	15673.3 ± 9.02	15685.39	$(-8 \pm 6) \times 10^2$	< 0.5
$K^-\,{}^{19}$F	$(6,5)$	12673.9 ± 9.2	12684.67	$(-8 \pm 7) \times 10^2$	< 0.3
	$(7,5)$	20298.8 ± 17.3	20327.46	$(-14 \pm 9) \times 10^2$	< 0.3
	$(5,4)$	23383.2 ± 7.2	23377.31	$(3 \pm 3) \times 10^2$	< 1
	$(8,5)$	25279.6 ± 36.5	25285.52	$\pm 1 \times 10^3$	< 0.2
	$(6,4)$	36073.3 ± 42.9	36061.98	$\pm 1 \times 10^3$	< 1
	$(4,3)$	50586.7 ± 33.5	50589.85	$\pm 6 \times 10^2$	< 10
$K^-\,{}^{11}$B	$(5,4)$	7064.62 ± 17.05	7065.07	$\pm 2 \times 10^3$	< 0.2
	$(4,3)$	15293.33 ± 7.15	15284.14	$(6 \pm 5) \times 10^2$	< 1
$K^-\,{}^{10}$B	$(5,4)$	6920.96 ± 58.26	7032.85	$(-16 \pm 8) \times 10^3$	< 0.2
	$(4,3)$	15180.11 ± 21.52	15214.4	$(-2 \pm 1) \times 10^3$	< 1

Backup:Non-Relativistic Potentials

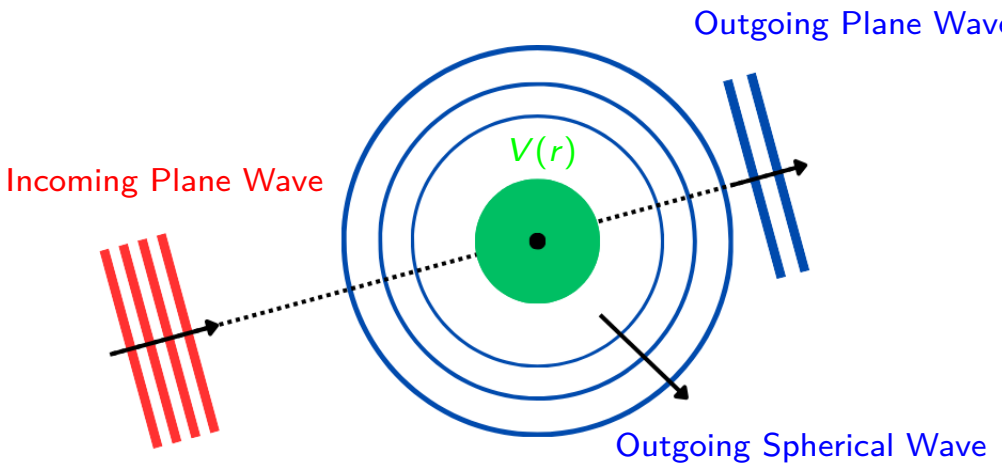

$$\frac{d\sigma}{d\Omega} \approx \left| \frac{\mu}{2\pi} \tilde{V}(q) \right|^2$$

with μ the reduced mass and $\tilde{V}$ is the Furier transform of the potential

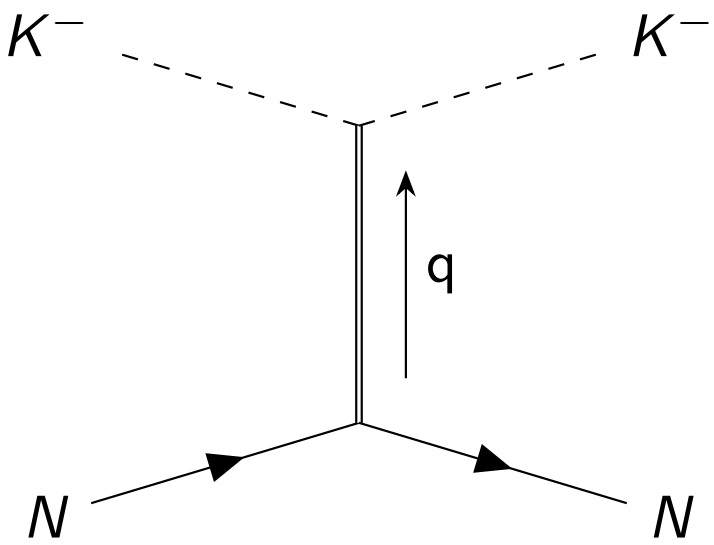

Collision in QFT (CoM frame):

$$\frac{d\sigma}{d\Omega} = \frac{|\mathcal{M}|^2}{(2\pi)^2 16 (E_N + E_K)^2}$$

Matching in the non-relativistic limit:

$$V(\boldsymbol{r}) = \frac{1}{(2\pi)^3} \int d^3q \frac{\mathcal{M}_{NR}(q)}{4 m_N m_K} e^{i\boldsymbol{qr}}$$

Non-Relativistic Potentials

SISSA

Scalar exchange

$$\mathcal{L}_S = g_K^s \frac{m_K^2}{v} \phi K^+ K^- + \frac{g_K^d}{v} \phi \partial_\mu K^+ \partial^\mu K^- + \frac{g_N^s}{v} \phi \bar{N} N$$

$$V_S(\boldsymbol{r}) = g_N^s \left[2(g_K^s + g_K^d) - g_K^d \left(\frac{m_\phi}{m_K} \right)^2 \right] \frac{m_K}{v^2} \frac{e^{-m_\phi r}}{16\pi r} + g_N^s g_K^d \frac{\delta^3(\boldsymbol{r})}{4v^2 m_K}$$

CP-violating pseudo-scalar exchange

$$\mathcal{L}_P = g_K^s \frac{m_K^2}{\Lambda} a K^+ K^- + g_K^d \frac{a}{\Lambda} \partial_\mu K^+ \partial^\mu K^- + g_N^A \frac{\partial_\mu a}{\Lambda} \bar{N} \gamma^\mu \gamma_5 N + \frac{g_N^s}{\Lambda} a \bar{N} N$$

$$V_P(\boldsymbol{r}) = g_N^s \left[2(g_K^s + g_K^d) - g_K^d \left(\frac{m_a}{m_K} \right)^2 \right] \frac{m_K}{\Lambda^2} \frac{e^{-m_a r}}{16\pi r} + \frac{g_N^s g_K^d}{4 m_K \Lambda^2} \delta^3(\boldsymbol{r}) +$$

$$- g_N^A \left[2(g_K^s + g_K^d) - g_K^d \left(\frac{m_a}{m_K} \right)^2 \right] \boldsymbol{S}_N \cdot \hat{\boldsymbol{r}} \frac{m_K}{\Lambda^2} \left(\frac{1}{r} + m_a \right) \frac{e^{-m_a r}}{8\pi r} + \frac{g_N^A g_K^d}{2 m_K \Lambda^2} \boldsymbol{S}_N \cdot \boldsymbol{\nabla} \delta^3(\boldsymbol{r})$$

Vector exchange

$$\mathcal{L}_V = g_N^V X_\mu \bar{N} \gamma^\mu N + g_N^A X_\mu \bar{N} \gamma^\mu \gamma_5 N - i g_K^V X_\mu (K^+ \partial^\mu K^- - K^- \partial^\mu K^+)$$

$$V(\boldsymbol{r}) = -g_K^V g_N^V \frac{e^{-m_X r}}{4\pi r} + g_K^V g_N^V \boldsymbol{S}_N \cdot \frac{\boldsymbol{L}}{\mu} \left(m_X + \frac{1}{r} \right) \frac{e^{-m_X r}}{2\pi r^2} + g_K^V g_N^A \boldsymbol{S}_N \cdot \left\{ \frac{\boldsymbol{P}}{\mu}, \frac{e^{-m_X r}}{2\pi r} \right\}$$

Backup:Non-Relativistic Potentials

SISSA

Scalar exchange

$$\mathcal{L}_S = g_K^s \frac{m_K^2}{v}\phi K^+K^- + \frac{g_K^d}{v}\phi\partial_\mu K^+\partial^\mu K^- + \frac{g_N^s}{v}\phi\bar{N}N$$

$$V_S(\boldsymbol{r}) = g_N^s\left[2(g_K^s+g_K^d) - g_K^d\left(\frac{m_\phi}{m_K}\right)^2\right]\frac{m_K}{v^2}\frac{e^{-m_\phi r}}{16\pi r} + g_N^s g_K^d\frac{\delta^3(\boldsymbol{r})}{4v^2 m_K}$$

CP-violating pseudo-scalar exchange

$$\mathcal{L}_P = g_K^s\frac{m_K^2}{\Lambda}aK^+K^- + g_K^d\frac{a}{\Lambda}\partial_\mu K^+\partial^\mu K^- + g_N^A\frac{\partial_\mu a}{\Lambda}\bar{N}\gamma^\mu\gamma_5 N + \frac{g_N^s}{\Lambda}a\bar{N}N$$

$$V_P(\boldsymbol{r}) = g_N^s\left[2(g_K^s+g_K^d) - g_K^d\left(\frac{m_a}{m_K}\right)^2\right]\frac{m_K}{\Lambda^2}\frac{e^{-m_a r}}{16\pi r} + \frac{g_N^s g_K^d}{4m_K\Lambda^2}\delta^3(\boldsymbol{r}) +$$
$$- g_N^A\left[2(g_K^s+g_K^d) - g_K^d\left(\frac{m_a}{m_K}\right)^2\right]\boldsymbol{S}_N\cdot\hat{\boldsymbol{r}}\frac{m_K}{\Lambda^2}\left(\frac{1}{r}+m_a\right)\frac{e^{-m_a r}}{8\pi r} + \frac{g_N^A g_K^d}{2m_K\Lambda^2}\boldsymbol{S}_N\cdot\boldsymbol{\nabla}\delta^3(\boldsymbol{r})$$

Vector exchange

$$\mathcal{L}_V = g_N^V X_\mu\bar{N}\gamma^\mu N + g_N^A X_\mu\bar{N}\gamma^\mu\gamma_5 N - ig_K^V X_\mu(K^+\partial^\mu K^- - K^-\partial^\mu K^+)$$

$$V(\boldsymbol{r}) = -g_K^V g_N^V\frac{e^{-m_X r}}{4\pi r} + g_K^V g_N^V\boldsymbol{S}_N\cdot\frac{\boldsymbol{L}}{\mu}\left(m_X+\frac{1}{r}\right)\frac{e^{-m_X r}}{2\pi r^2} + g_K^V g_N^A\boldsymbol{S}_N\cdot\left\{\frac{\boldsymbol{P}}{\mu},\frac{e^{-m_X r}}{2\pi r}\right\}$$

Backup:Non-Relativistic Potentials

SISSA

Scalar exchange

$$\mathcal{L}_S = g_K^s \frac{m_K^2}{v}\phi K^+K^- + \frac{g_K^d}{v}\phi\partial_\mu K^+\partial^\mu K^- + \frac{g_N^s}{v}\phi\bar{N}N$$

$$V_S(\boldsymbol{r}) = g_N^s\left[2(g_K^s+g_K^d) - g_K^d\left(\frac{m_\phi}{m_K}\right)^2\right]\frac{m_K}{v^2}\frac{e^{-m_\phi r}}{16\pi r} + g_N^s g_K^d\frac{\delta^3(\boldsymbol{r})}{4v^2 m_K}$$

CP-violating pseudo-scalar exchange

$$\mathcal{L}_P = g_K^s\frac{m_K^2}{\Lambda}aK^+K^- + g_K^d\frac{a}{\Lambda}\partial_\mu K^+\partial^\mu K^- + g_N^A\frac{\partial_\mu a}{\Lambda}\bar{N}\gamma^\mu\gamma_5 N + \frac{g_N^s}{\Lambda}a\bar{N}N$$

$$V_P(\boldsymbol{r}) = g_N^s\left[2(g_K^s+g_K^d) - g_K^d\left(\frac{m_a}{m_K}\right)^2\right]\frac{m_K}{\Lambda^2}\frac{e^{-m_a r}}{16\pi r} + \frac{g_N^s g_K^d}{4m_K\Lambda^2}\delta^3(\boldsymbol{r}) +$$
$$- g_N^A\left[2(g_K^s+g_K^d) - g_K^d\left(\frac{m_a}{m_K}\right)^2\right]\boldsymbol{S}_N\cdot\hat{\boldsymbol{r}}\frac{m_K}{\Lambda^2}\left(\frac{1}{r}+m_a\right)\frac{e^{-m_a r}}{8\pi r} + \frac{g_N^A g_K^d}{2m_K\Lambda^2}\boldsymbol{S}_N\cdot\boldsymbol{\nabla}\delta^3(\boldsymbol{r})$$

Vector exchange

$$\mathcal{L}_V = g_N^V X_\mu\bar{N}\gamma^\mu N + g_N^A X_\mu\bar{N}\gamma^\mu\gamma_5 N - ig_K^V X_\mu(K^+\partial^\mu K^- - K^-\partial^\mu K^+)$$

$$V(\boldsymbol{r}) = -g_K^V g_N^V\frac{e^{-m_X r}}{4\pi r} + g_K^V g_N^V\boldsymbol{S}_N\cdot\frac{\boldsymbol{L}}{\mu}\left(m_X+\frac{1}{r}\right)\frac{e^{-m_X r}}{2\pi r^2} + g_K^V g_N^A\boldsymbol{S}_N\cdot\left\{\frac{\boldsymbol{P}}{\mu}, \frac{e^{-m_X r}}{2\pi r}\right\}$$

Backup: Protophobic model

$$\mathcal{L} = -\frac{1}{4}\hat{F}_{\mu\nu}\hat{F}^{\mu\nu} - \frac{1}{4}\hat{X}_{\mu\nu}\hat{X}^{\mu\nu} + \frac{\epsilon}{2}\hat{F}_{\mu\nu}\hat{X}^{\mu\nu} + \frac{1}{2}m^2_{\hat{X}}\hat{X}_\mu\hat{X}^\mu + \sum_f \bar{f} i \not{D} f$$

with the covariant derivative

$$D_\mu f = (\partial_\mu - ieQ_f\hat{A}_\mu - ie\epsilon_B B_f \hat{X}_\mu)f$$

where Q_f and B_f are the electric charge and baryon number of the fermion.
With the specific choice $\epsilon = -\epsilon_B$ and defining $g = \frac{\epsilon}{1-\epsilon^2}$, we obtain the following effective (protophobic) Lagrangian:

$$\mathcal{L}^{int}_X = geX_\mu \bar{n}\gamma^\mu n + igeX_\mu(K^+\partial^\mu K^- - K^-\partial^\mu K^+)$$

where X_μ is the physical vector boson obtained after the diagonalization of the kinetic mixing term.