Recent developments in the higher twist formalism

Chathuranga Sirimanna

CS, S. Cao, A. Majumder; PRC 105 (2022) 2, 024908

S. Cao, CS, A. Majumder; [ArXiv: 2101.03681] [hep-ph]

Outline

- Introduction
- Prior work on Jet Quenching
- Dispute over Collinear Expansion
- Full next-to-leading twist calculation
- Multistage evolution
- Importance of High Virtuality phase of the energy loss
- Summary

Parton Energy Loss in DIS

- Guo and Wang (GW); Phys. Rev. Lett., 85:3591–3594, 2000, Nucl. Phys., A696:788–832, 2001
  - Drag and Radiative energy loss of an energetic parton using higher-twist
- Transverse broadening of jets – Majumder and Müller; PRC 77 (2008) 054903
  - Multiple scattering with no emission
- Multiple Scattering per emission – Majumder; PRD 85 (2012) 014023
- Differential cross section for DIS
  - $$\frac{d\sigma}{d^3\ell_2 dz} = \frac{\alpha_{EM}^2}{2\pi(p+\ell_1)^2}\frac{1}{E_{\ell_2}Q^4}\, L^{\mu\nu}\frac{dW_{\mu\nu}}{dz}$$

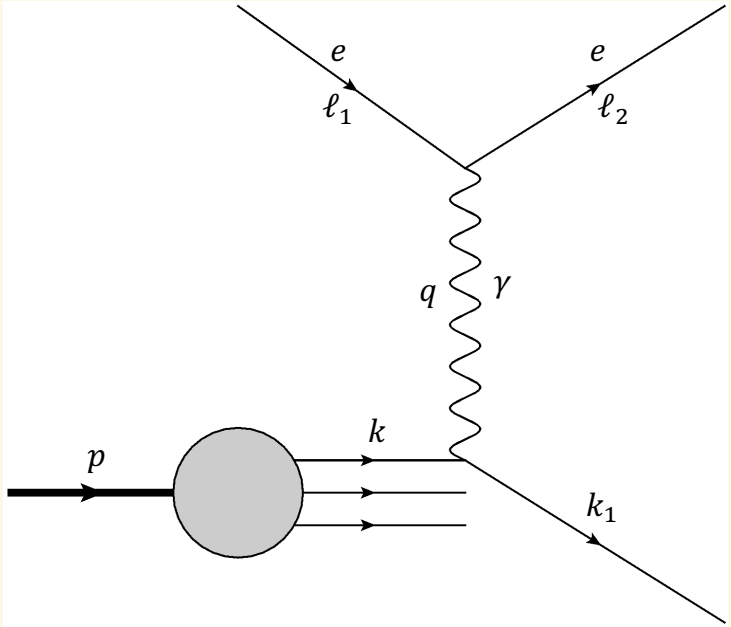

Leading Twist

- Twist 2
- No medium interaction after hard scattering → vacuum like

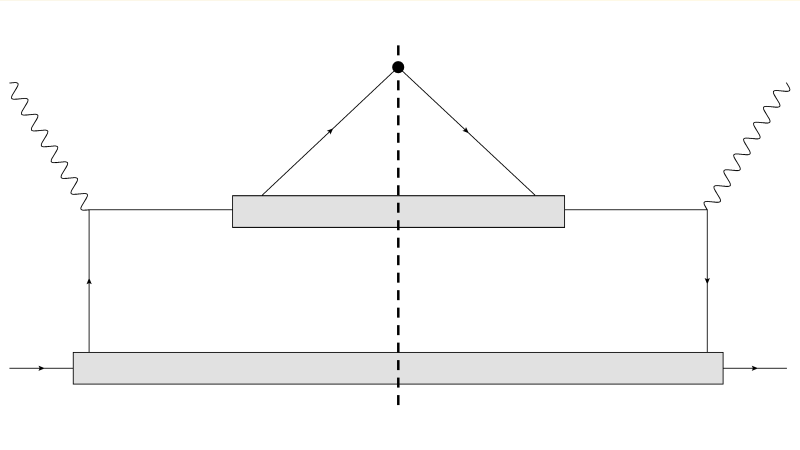

- $\frac{dW_{\mu\nu}}{dz} = \sum_q \int dx\, f_q(x)\, H^0_{\mu\nu}(x) D(z,\mu^2)$
- $D(z,\mu^2)$ - renormalized quark fragmentation function satisfies DGLAP evolution equation

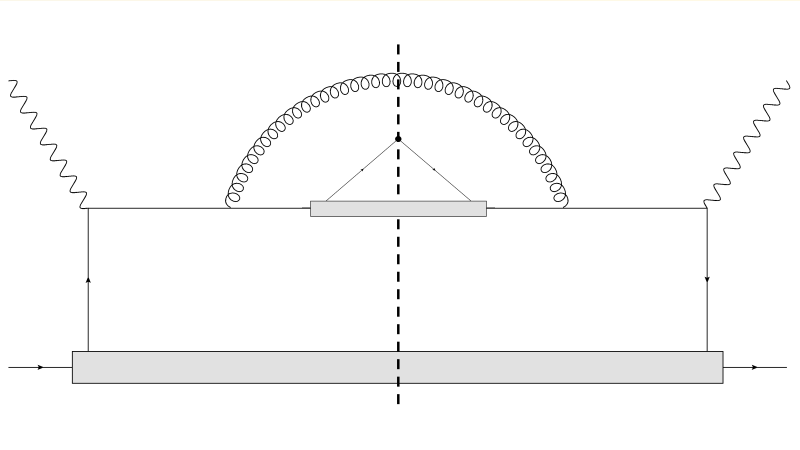

  - $\mu^2 \frac{\partial D(z,\mu^2)}{\partial \mu^2} = \frac{\alpha_S}{2\pi} \int_z^1 \frac{dy}{y} P_+(y) D\left(\frac{z}{y}, \mu^2\right)$

NL Twist - Single Scattering per Emission

- Guo and Wang (GW); Phys. Rev. Lett., 85:3591–3594, 2000, Nucl. Phys., A696:788–832, 2001
- Energy loss of highly virtual partons
- Soft and collinear emission, and rare gluon exchange approximations are used
- Only final state modifications are studied
- 20+ Feynman Diagrams → 19 gluon exchange
- Secondary scattering with exchange quarks - suppressed by $1/Q^2$
- Medium interactions modify the evolution of fragmentation function

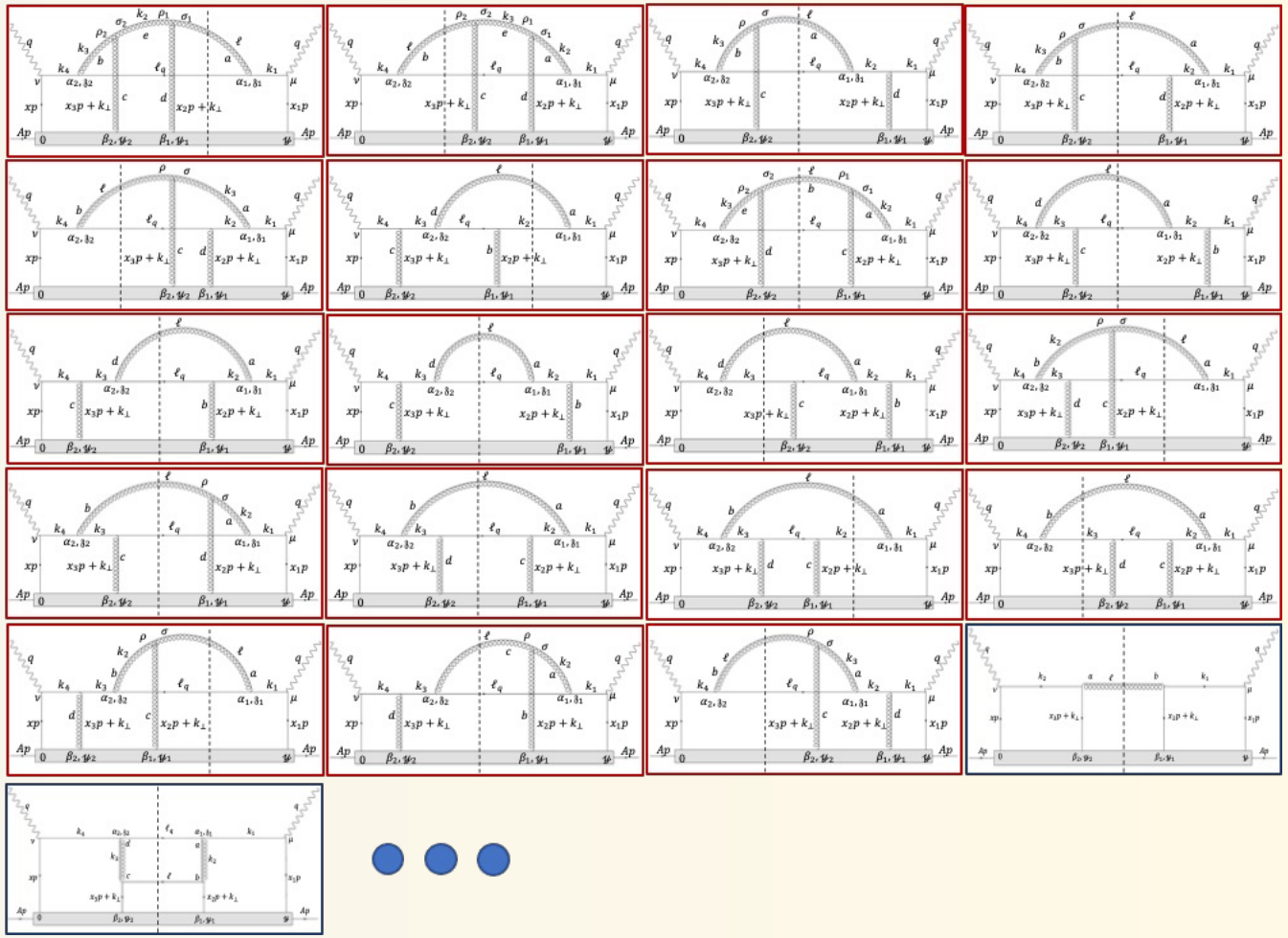

Higher Twist - Multiple Scattering per Emission

- Majumder - PRD 85 (2012) 014023
- Considered the possibility of multiple scattering
- Only final state modifications are studied
- Realistic approach for partons with any virtuality
- Final result has not been implemented in numerical simulation
- Can be reduced to the NLT result

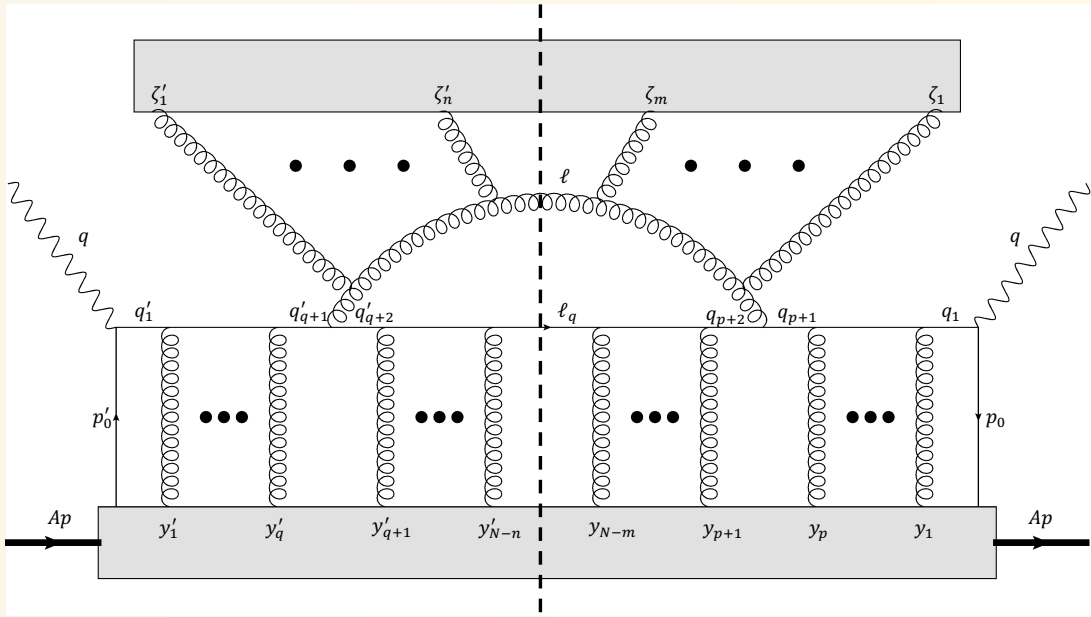

It all came down to one Feynman Diagram

- 19 gluon exchange diagrams – In Guo-Wang, reduced to only one contributing diagram
- Simple result – Numerical implementation is convenient
- Next-to-leading twist contribution of the hard part → Collinear expansion around $k_\perp = 0$
  - $k_\perp$ - Transverse momentum of the exchange gluon
- $k_\perp$-dependent phase factors → Ignored before collinear expansion
- Medium modified fragmentation function - $\widetilde{D}(q^-, z, \mu^2) = \mathcal{K}_{GW}(q^-, z) D(z, \mu^2)$ → Satisfies medium modified DGLAP evolution equation

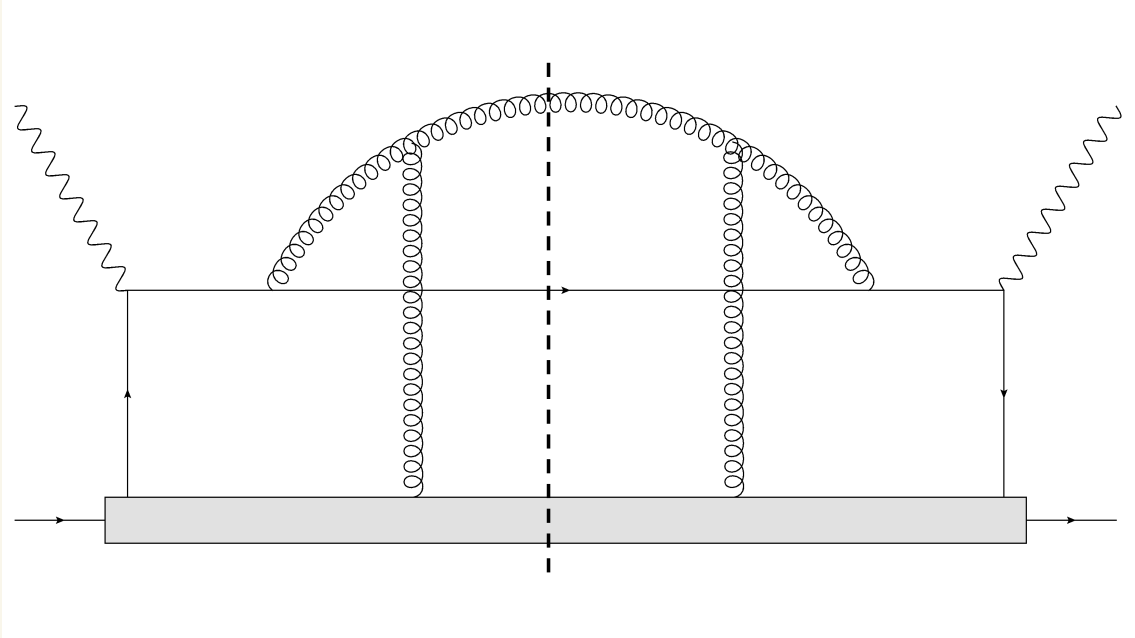

$$\frac{dW_{\mu\nu}}{dz} = \sum_q \int dx\, f_q(x)\, H^0_{\mu\nu}(x) \mathcal{K}(q^-, z) D(z, \mu^2)$$

$$\mathcal{K}_{GW}(q^-, z) = \frac{\alpha_S}{2\pi} \int \frac{d\mu^2}{\mu^4} d\xi^- C_F \frac{1+z^2}{1-z} \frac{1}{z(1-z)} \hat{q}(\xi^-) \times \left\{ 2 - 2\cos\left(\frac{\mu^2 \xi^-}{2q^-}\right) \right\}$$

It all came down to one Feynman Diagram

- Along with the vacuum kernel, there is a medium modified kernel
- First part (red color) of the kernel is the same for all three studies
- Positive Definite (with mild fluctuations)
- Formation time, $\tau_F = \frac{2q^-}{\mu^2}$

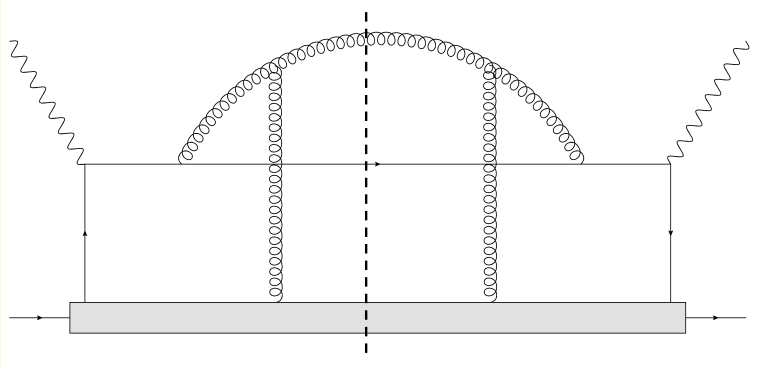

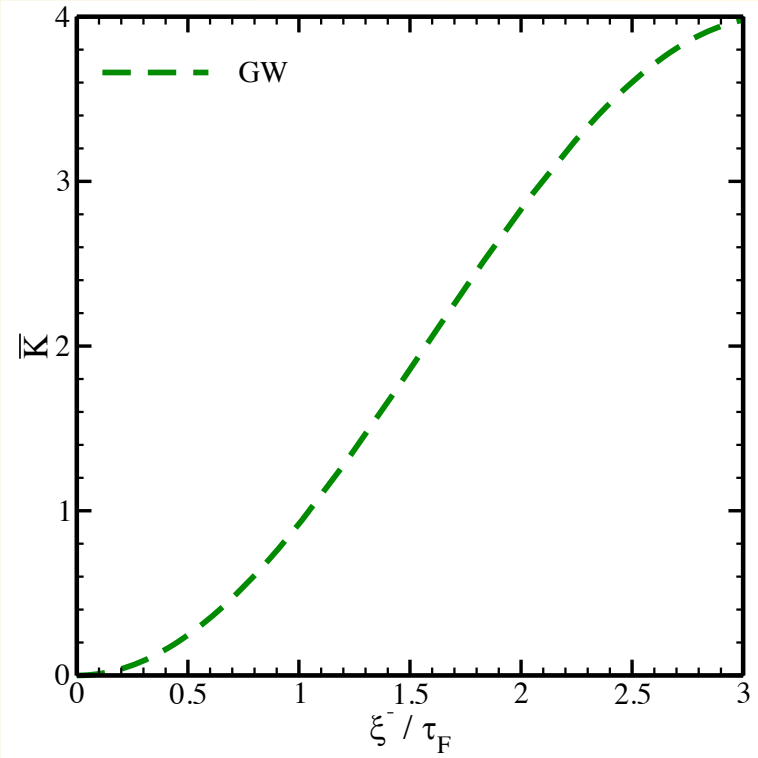

$\overline{K}$

$$\mathcal{K}_{GW}(q^-, z) = \frac{\alpha_S}{2\pi} \int \frac{d\mu^2}{\mu^4} d\xi^- C_F \frac{1+z^2}{1-z} \frac{1}{z(1-z)} \hat{q}(\xi^-) \left\{ 2 - 2\cos\left(\frac{\xi^-}{\tau_F}\right) \right\}$$

Dispute over Collinear Expansion

- $k_\perp$-dependence in the phase factors is neglected before twist expansion
  - Very high energies
  - Shorter medium lengths compared to formation time
- Aurenche, Zakharov and Zaraket (AZZ); JETP Lett. 87 (2008) 605-610, arXiv: 0805.0839 [hep-ph], arXiv: 0806.0160 [hep-ph]
  - $k_\perp$-dependence in the phase factors – significant in media longer than τ_F
  - Only one Feynman diagram
  - Soft and collinear gluon emission

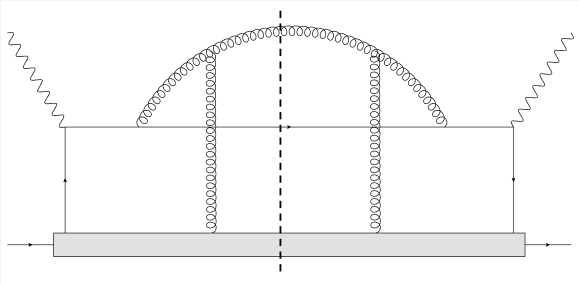

- $\bar{K}_{AZZ} = 2 - 2\cos\left(\frac{\xi^-}{\tau_F}\right) - 2\left(\frac{\xi^-}{\tau_F}\right)\sin\left(\frac{\xi^-}{\tau_F}\right) + 2\left(\frac{\xi^-}{\tau_F}\right)^2\cos\left(\frac{\xi^-}{\tau_F}\right)$
- Two additional terms - oscillatory at large path lengths
  - Can be negative

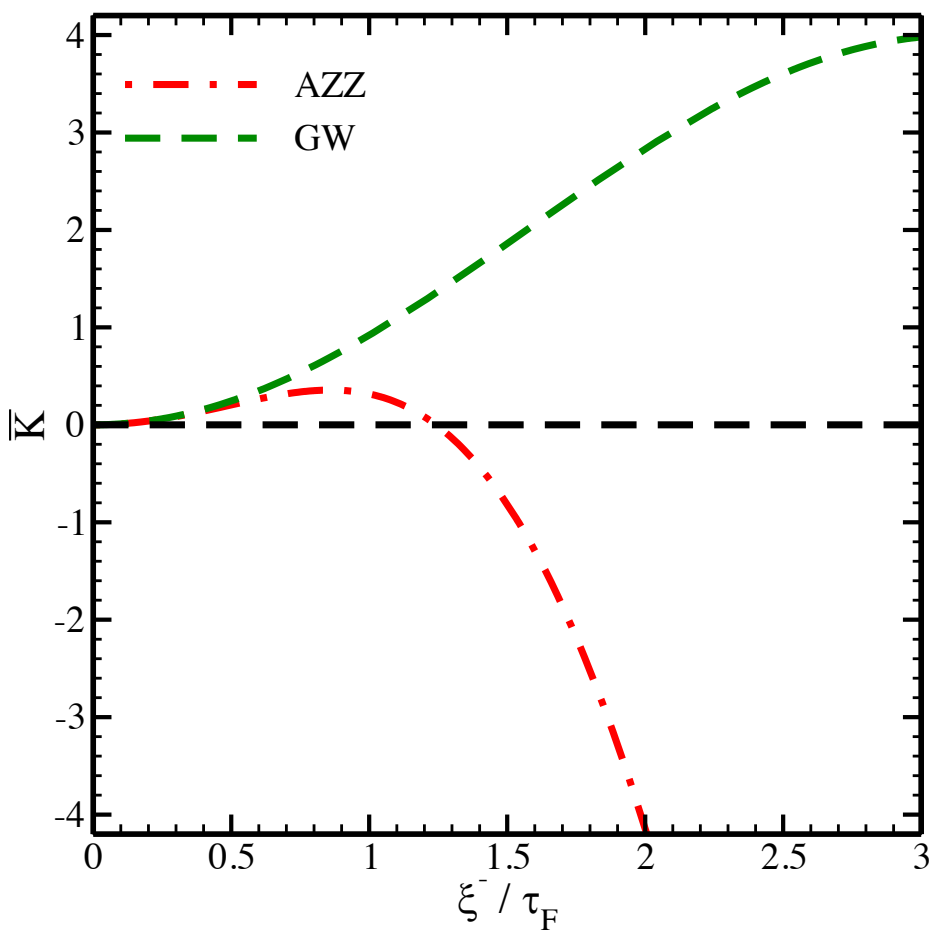

Full Next-to-leading Twist Calculation

- Both GW and AZZ calculations are somewhat incomplete
  - GW → $k_\perp$-dependence in the phase factors ignored
  - AZZ → Only one diagram considered
  - Other diagrams give additional contribution when phase factors considered
- 19 Feynman Diagrams – Only gluon exchange
  - No soft and collinear gluon emission approximation
  - $k_\perp$-dependence in the phase factors are considered
- Additional contributing diagrams
  - Total of 7 contributing diagrams
  - Soft collinear emission – 5 contributing diagrams

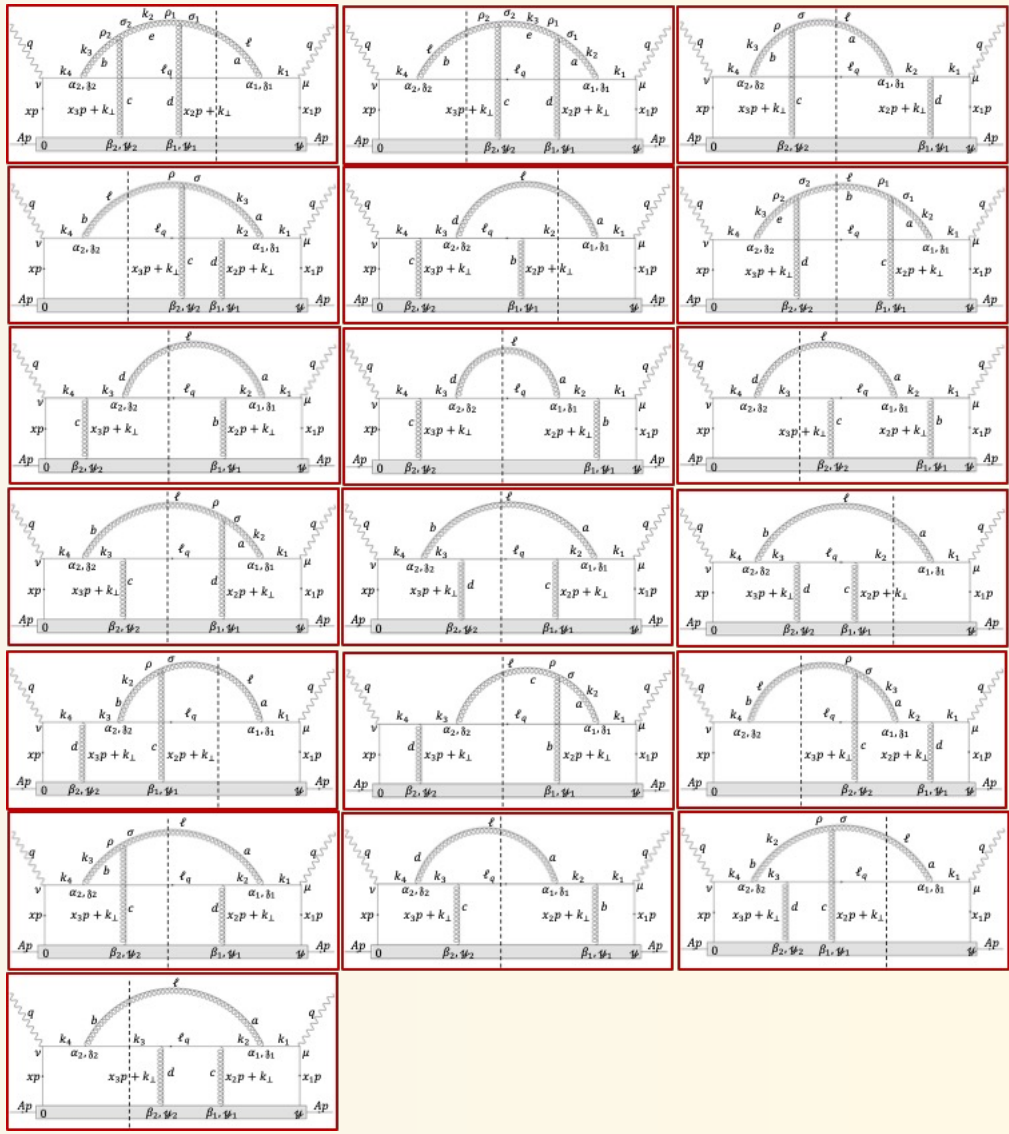

Additional Contributions

- Six additional Feynman diagrams
- Two non-central cut diagrams
  - Phase space constraint
  - Additional factor can be ranging form 0 to ½ from the vector potential correlator
- Two diagrams with pre-emission scattering (PES)
  - Suppressed by momentum fraction, z in the limit of soft gluon approximation
  - Not all the terms suppressed by z in Full calculation

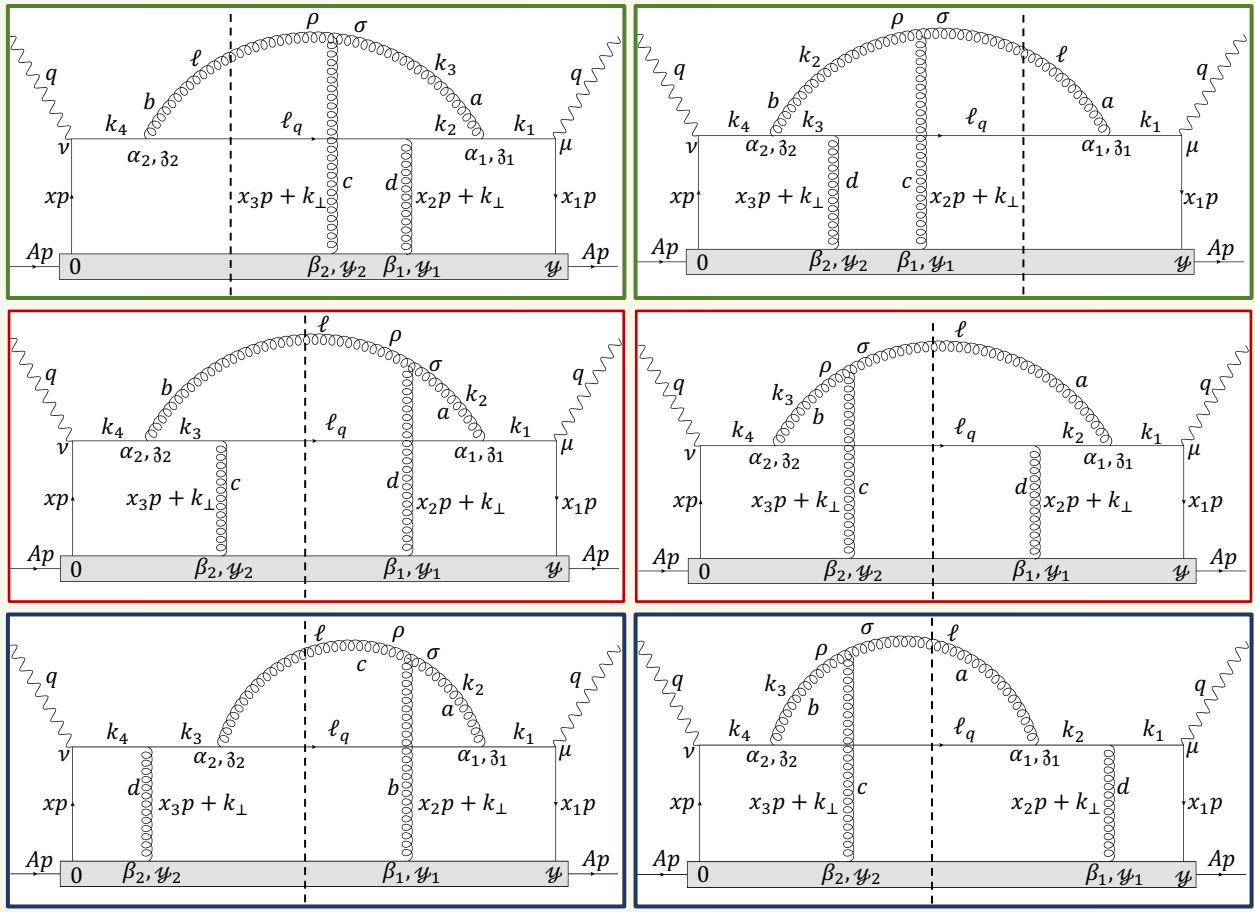

Medium Modified Kernel

- Additional momentum fraction, z dependence
  - Numerical simulation can be complex
  - Considerable difference between the results
- n – phase space constraint
  - $0 < n < \frac{1}{2}$
  - Result shown as a band
- Positive definite and increasing with path length

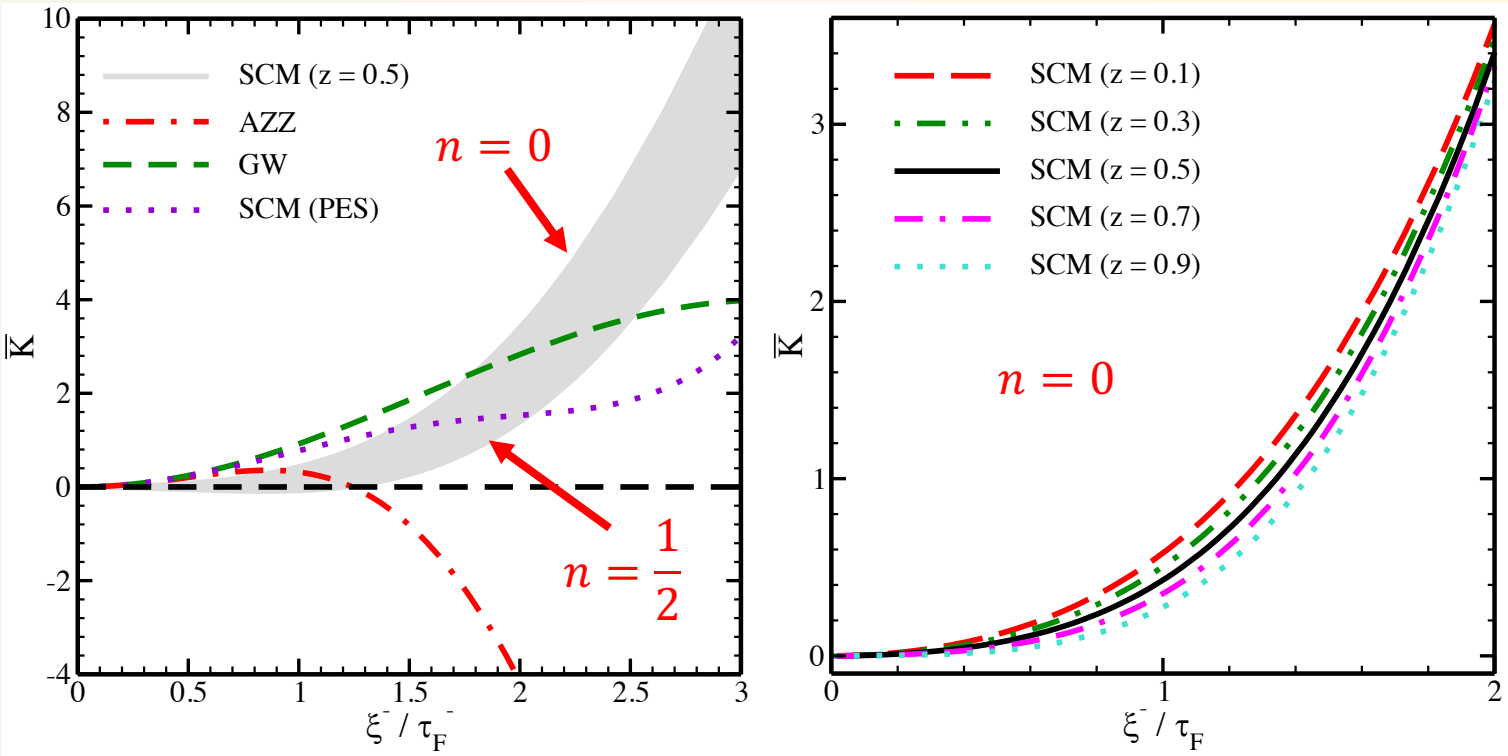

$$\bar{K}_{SCM} = \left\{ \frac{1+z}{2} \left[2 - 2\cos\left(\frac{\xi^-}{\tau_F}\right) - 2\left(\frac{\xi^-}{\tau_F}\right)\sin\left(\frac{\xi^-}{\tau_F}\right) \right] + (1-n)\left(\frac{\xi^-}{\tau_F}\right)^2 \right\}$$

Kernel Comparison – GW vs. SCM

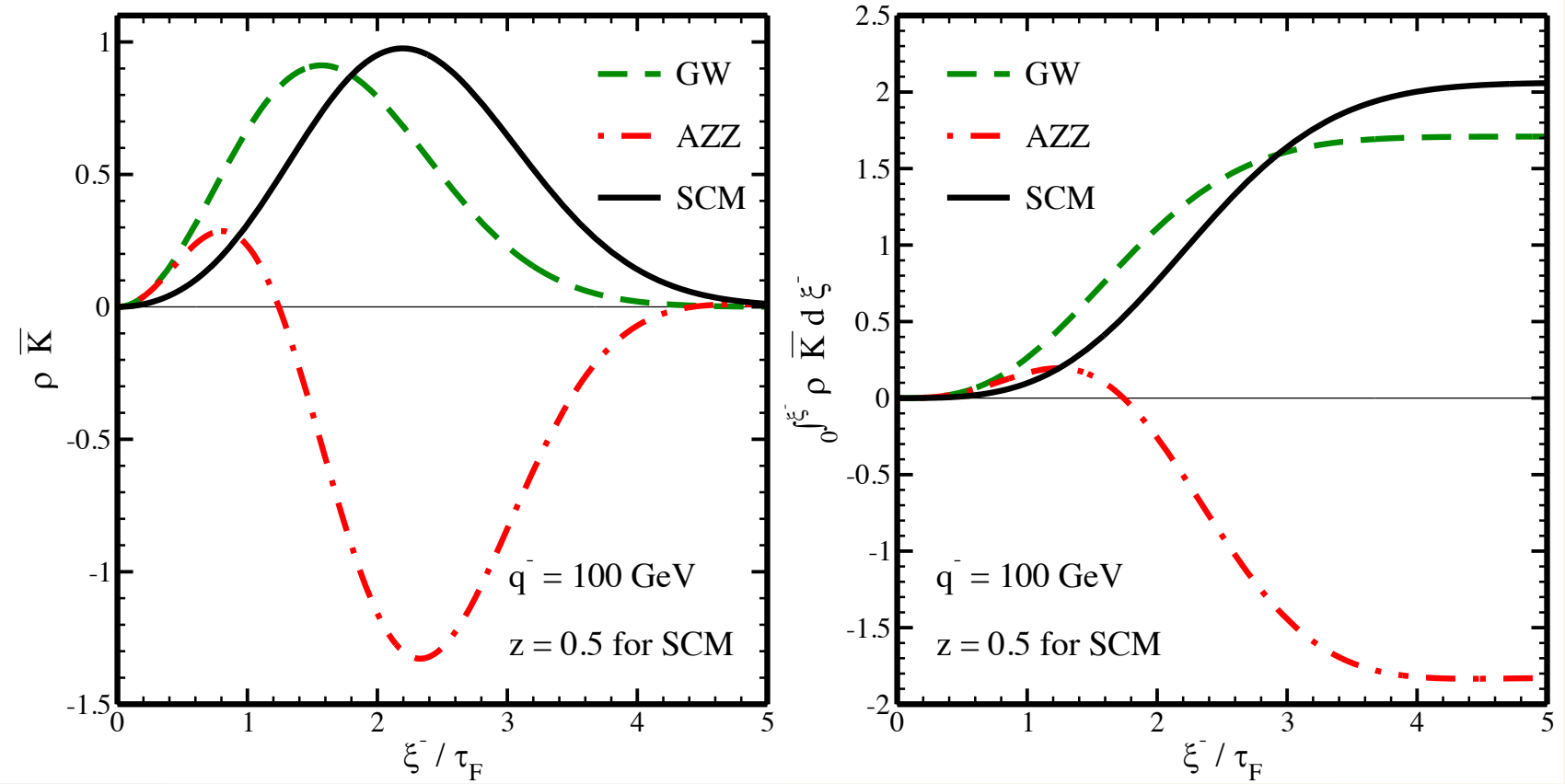

High virtuality partons

Above τ_F → Need to multiply by wave packet

Gaussian Envelope Function from vacuum emission – Majumder; Phys.Rev.C 88 (2013) 014909

$$\rho\left(\frac{\xi^-}{\tau_F}\right) = e^{\left(-\frac{\xi^-}{\tau_F\sqrt{\pi}}\right)^2}$$

GW vs. SCM

- Accumulative energy of emitted gluons (For $n = 0$)
- $100\ GeV$ quark with $\hat{q} = 1\ GeV^2/fm$
- Small path lengths → SCM result comparable to GW
- Large path lengths → Significant difference can be observed
- A full Monte-Carlo simulation of jet quenching through a realistic hydrodynamic medium is required
- Important in low virtuality phase
  - Large formation times → Radiation can take longer than $1\ fm$
- High virtuality phase may not have significant effect
  - Formation times are small

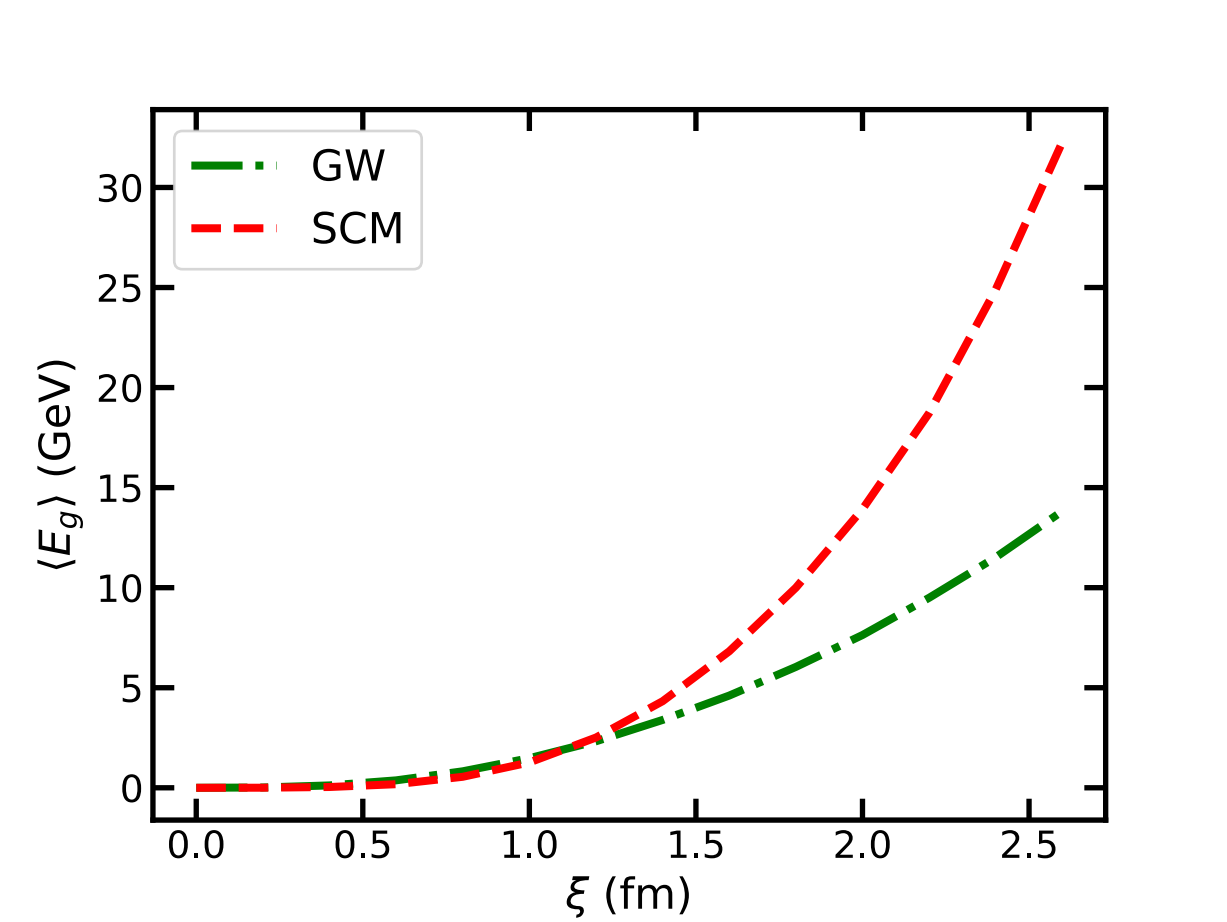

Phys.Rev.C 91 (2015) 054908, *Phys.Rev.C* 97 (2018) 1, 019902 (erratum)

Multistage Evolution

- At least two stages of the partonic shower
  - High virtuality stage – $\mu^2 > \hat{q}\tau$ → DGLAP evolution
  - Low virtuality stage – Described by multiple scattering per emission
- Importance of high virtuality stage is usually underrated
  - High virtuality → Small formation time → Number of scattering is small
  - Parton shower is usually assumed to be vacuum like
- Importance of the high virtuality part is studied within a multi-stage event generator
  - JETSCAPE 0.x

The JETSCAPE Framework

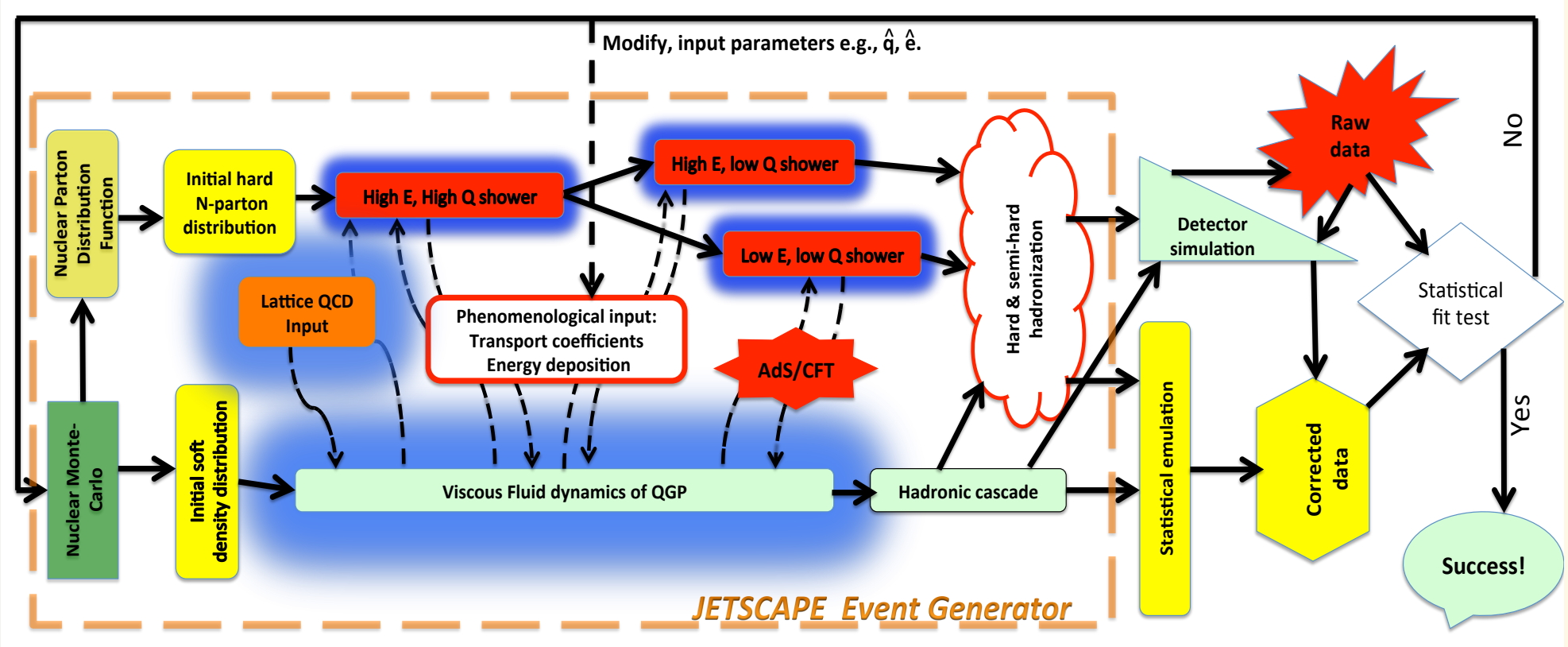

- JETSCAPE: General, modular and extensive framework
- Multi-stage jet evolution → Different stages depending on the virtuality, Q and energy, E of the partons
- Latest version of JETSCAPE publicly available at https://github.com/JETSCAPE/JETSCAPE
- Manual (arXiv:1903.07706), JETSCAPE PP19 tune (arXiv:1910.05481), JETSCAPE AA paper (arXiv:2204.01163)

Vacuum vs. Medium Modified Splitting Function

- Increasing Virtuality scale → relative medium contribution decreases
- Medium modified kernel - $\mathcal{K}_{GW}(q^-, z)$

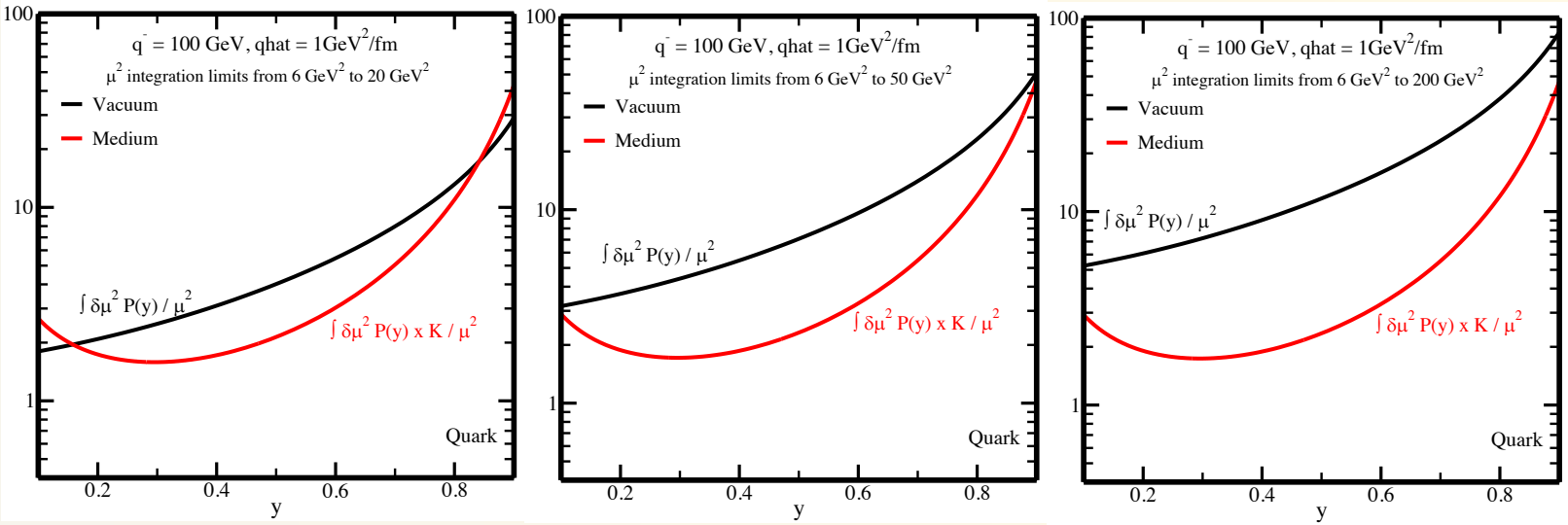

- Medium-modified part → perturbation to the vacuum term
- $\mu^2_{min} \simeq \sqrt{2\hat{q}q^-}$; Constant transport coefficient $\hat{q} = 1\ GeV^2/fm$
- Below certain virtuality – medium modification become compatible to vacuum
  - High virtuality formalism is invalid
  - Low virtuality transport stage should be used

Fate of the Leading (hardest) Parton

- P_{vac}- High virtuality stage is vacuum like
- P_{med}- Partons in high virtuality stage interact with the medium
- JETSCAPE 0.x
- Medium interactions increase the time spend and Number of Scatterings in DGLAP evolution
- Transport evolution dominates in low virtuality
- RHIC jets are different from LHC jets!

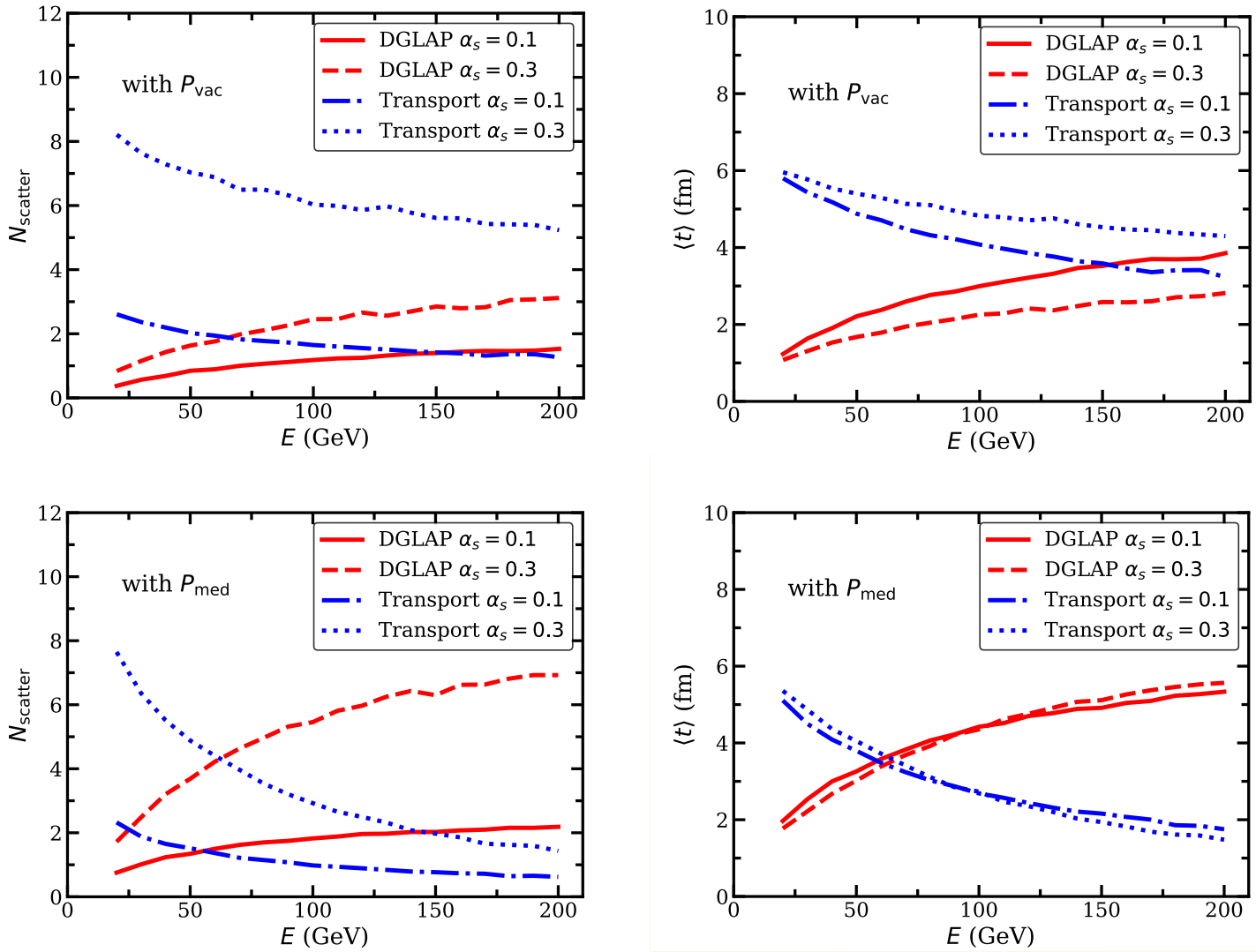

Experimental Comparison

- Vacuum – MATTER vacuum shower, $\mu_{min}^2 = 1\ GeV^2$
- PbPb – MATTER+LBT
- JETSCAPE 0.x
- DGLAP alone shows excellent agreement at high p_T
- Significant suppression at low p_T when combine with transport
- Emphasize the importance of Multistage evolution

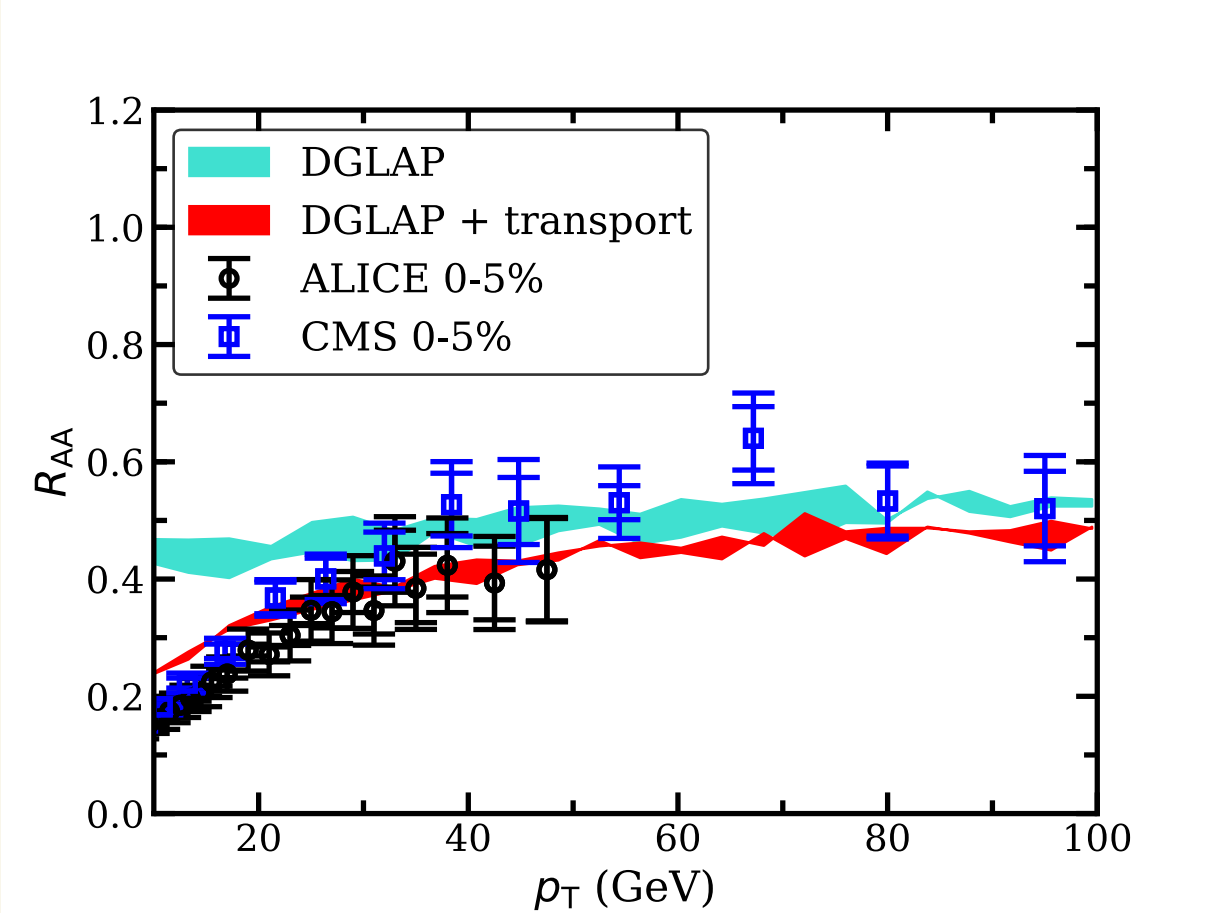

Summary and Conclusion

- Full next-to-leading twist calculation to address long dispute over collinear expansion
  - Result is similar to GW at high virtuality
  - One step towards more precision
  - Important for theoretical predictions for high luminosity LHC and SPHENIX
- High virtuality phase of the parton shower has significant impact on the high p_T partons
- Multistage evolution is required for an accurate description of experimental results

Thank You!