# Entanglement Renormalization for Interacting QFT

Javier Molina-Vilaplana

UPCT

Trento, June 12, 2019

# Outline

# Outline

# Motivation

- MERA, a variational real-space renormalization scheme on the quantum state, represents the wavefunction of the quantum system at different length scales [Vidal07].
- Continuous version of MERA, cMERA, proposed for free QFT $\Rightarrow$ Gaussian cMERA [Haegeman et al, 2011].
- cMERA as a possible realization of holography, $\Rightarrow$ develop interacting versions of cMERA.
- **Our Goal**: to provide a non-perturbative method to build truly non-Gaussian cMERA wavefunctionals for interacting QFTs.
- arXiv: 1904.07241: collaboration with **J.J Fernández-Melgarejo** and **E. Torrente-Lujan @ University of Murcia**.

# Outline

# Generating non-Gaussian wavefunctions

- Wavefunctionals $\Psi[\phi]$ in QFT for which the E.V of observables can be computed exactly are Gaussians

$$\Psi[\phi] \propto \exp\left[-\int dx \int dy\, \phi(x)\, K(x,y)\, \phi(y)\right]$$

- Extensions: shifting $\phi \to \phi - \chi_0$ with $\chi_0$ a $c$-number.
- The generalization here is also derived from the Gaussians.
- The basic idea is illustrated by the following quantum mechanical example.

# Generating non-Gaussian wavefunctions

In QM, it is hard to evaluate the EVs with a w.f,

$$\Psi \propto \exp\left[-x^2 - x^4\right]$$

With 2 dof's we can generate non-Gaussian w.f like

$$\Psi_{NG} \propto \exp\left[-(x^2 + y^2) - 2xy^2 - y^4\right]$$

by starting from a Gaussian,

$$\Psi_G \propto \exp\left[-(x^2 + y^2)\right]$$

and shifting $x$ by a function $f(y)$, in our case

$$x \to x + y^2$$

# Generating non-Gaussian wavefunctions

- The Jacobian of $x \to x + y^2$ is 1.
- The EV of polynomials $P(x, y)$ with $\Psi_{NG}$ reduce to Gaussian EV.

**This can subsumed in terms of the unitary**

$$\mathbf{U} = \exp\left(y^2\, \partial/\partial x\right)$$

The transformation of canonical variables can be computed using

$$\exp(A)\, B\, \exp(-A) = B + [A, B] + \cdots$$

which in our example terminates after the first commutator

$$\begin{aligned} x' &= \mathbf{U}\, x\, \mathbf{U}^\dagger = x + y^2 \qquad & (\partial/\partial x)' = (\partial/\partial x) \\ y' &= \mathbf{U}\, y\, \mathbf{U}^\dagger = y \qquad & (\partial/\partial y)' = (\partial/\partial y) - 2y(\partial/\partial x) \end{aligned}$$

# Generating non-Gaussian wavefunctions

**We generate the non-Gaussian w.f as**

$$|\Psi_{NG}\rangle = \mathbf{U}\,|\Psi_G\rangle$$

$\Rightarrow$ Expectation values of a polynomial operator can be evaluated in terms of Gaussian expectation values

$$\langle\Psi_G|\mathbf{U}^\dagger\, P(x, y, \frac{\partial}{\partial x}, \frac{\partial}{\partial y})\,\mathbf{U}|\Psi_G\rangle = \langle\Psi_G|\, P(\mathbf{U}^\dagger\, x\,\mathbf{U}, \cdots, \mathbf{U}^\dagger\,\frac{\partial}{\partial y}\,\mathbf{U})|\Psi_G\rangle$$

**Can we use these ideas in the context of interacting QFTs and cMERA?**

# $\lambda\,\phi^4$ scalar theory

**Described by the Hamiltonian**

$$\mathcal{H} = \int_{\mathbf{p}} \left[ \frac{1}{2} \left( \pi(\mathbf{p})\pi(-\mathbf{p}) + \omega(p)^2 \phi(\mathbf{p})\phi(-\mathbf{p}) \right) + \frac{\lambda}{4!} \int_{\mathbf{q},\mathbf{k},\mathbf{r}} \phi(\mathbf{p})\phi(\mathbf{q})\phi(\mathbf{k})\phi(\mathbf{r}) \right]$$

with $\omega(p) = (p^2 + m^2)^{1/2}$. In the free case, the vacuum state is given by the shifted Gaussian (SG) wavefunctional

$$\Psi_{SG}[\phi] = \exp\left[ -\frac{1}{2} \int_{\mathbf{p}} (\phi(\mathbf{p}) - \chi_0)\, F^{-1}(p)\, (\phi(-\mathbf{p}) - \chi_0) \right]$$

where $F^{-1}(p) = \omega(p)$ and

$$\chi_0 = \langle \Psi_{SG} | \phi(x) | \Psi_{SG} \rangle$$

# Outline

# cMERA

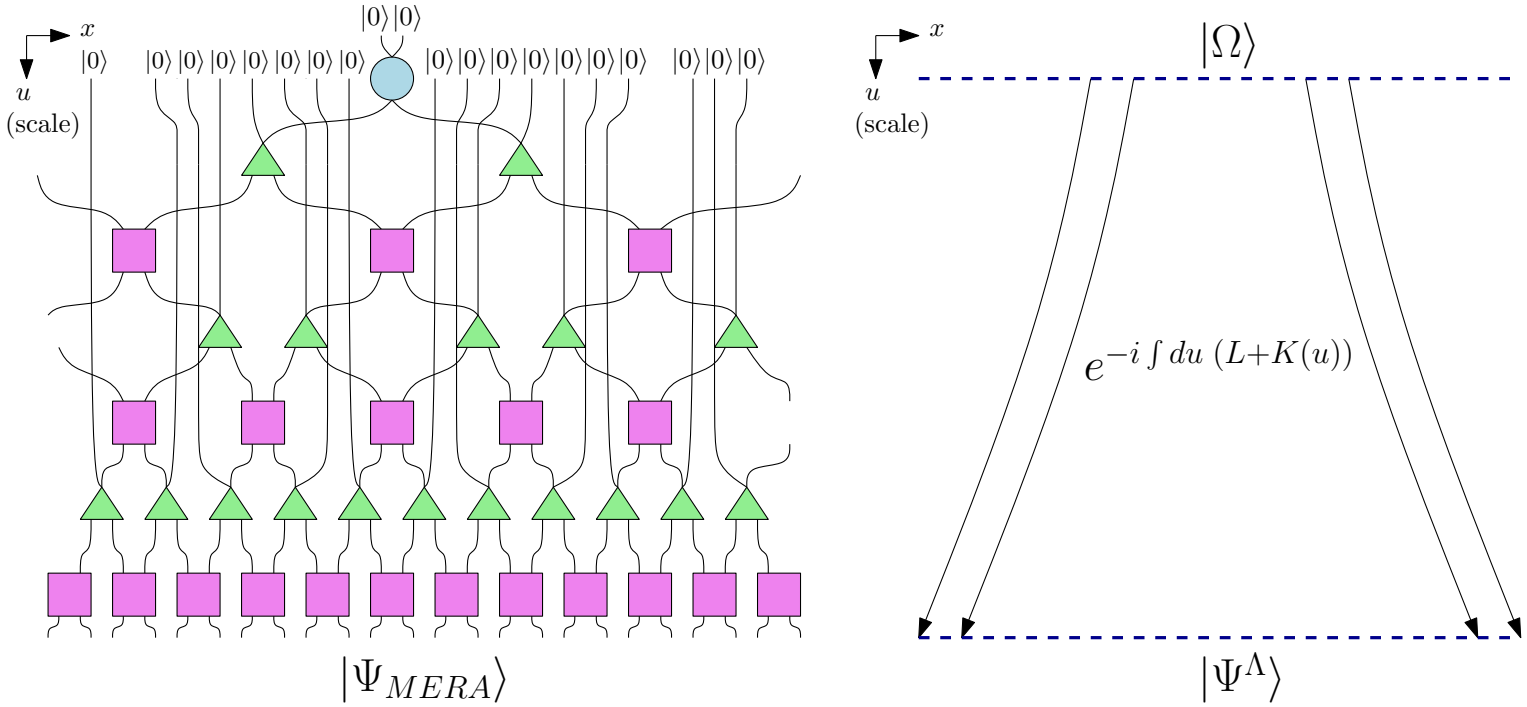


cMERA is a real-space renormalization group procedure on the quantum state that builds a scale-dependent wavefunctional

$$\Psi[\phi, u] = \langle\phi|\Psi_u\rangle = \langle\phi|\,\mathcal{P}\,e^{-i\int_{u_{\rm IR}}^{u}(K(u')+L)\,du'}\,|\Omega_{\rm IR}\rangle$$

# cMERA

## cMERA wavefunctional

$$\Psi[\phi, u] = \langle \phi | \Psi_u \rangle = \langle \phi | \, \mathcal{P} \, e^{-i \int_{u_{\rm IR}}^{u} (K(u') + L) \, du'} \, | \Omega_{\rm IR} \rangle$$

- $K(u)$ is the entangler operator and the only variational parameters of the ansatz are those which parametrize it.
- $L$ is the generator of dilatations - coarse graining
- $|\Omega_{\rm IR}\rangle$ is a reference IR Gaussian state with no entanglement between spatial regions.

# cMERA

For free scalar theories

## cMERA Entangler

$$K(u) = \frac{1}{2}\int_{\mathbf{p}} g_0(p,u)\,[\phi(\mathbf{p})\pi(-\mathbf{p}) + \pi(\mathbf{p})\phi(-\mathbf{p})]$$

$$g_0(p;u) = g_0(u)\,\Gamma(p/\Lambda)\,, \qquad \Gamma(x) \equiv \Theta(1-|x|)$$

The cMERA wavefunctional is given by

## Gaussian cMERA

$$\Psi[\phi;u]_{SG} = N\,e^{-\frac{1}{2}\int_{\mathbf{p}}(\phi(\mathbf{p})-\chi_0)\,F^{-1}(p;u)\,(\phi(-\mathbf{p})-\chi_0)}$$

where [Cotler, MV, Muller, 16]

$$F^{-1}(p;u) = \omega_\Lambda\, e^{2\int_0^u du'\;\; g_0(pe^{-u'},u')}\,.$$

cMERA is QFT in the functional Schrödinger picture

# cMERA

## cMERA Linear Field Transformation

$$U_G(0,u)^{-1}\phi(\mathbf{p})U_G(0,u) = e^{-f(p,u)}e^{-\frac{u}{2}d}\phi(\mathbf{p}e^{-u})$$

$$U_G(0,u)^{-1}\pi(\mathbf{p})U_G(0,u) = e^{f(p,u)}e^{-\frac{u}{2}d}\pi(\mathbf{p}e^{-u})$$

with

$$U_G(u_1,u_2) \equiv \mathcal{P}e^{-i\int_{u_2}^{u_1} du(K(u)+L)}$$

and

$$f(p,u) = \int_0^u du' \; g_0(pe^{-u'},u')$$

# Outline

# Non-Gaussian Wavefunctionals

- Trial states created by polynomial corrections to $\Psi[\phi]_{SG} \sim$ finite number of particles suppressed in the thermodynamic limit.
- A post Gaussian ansatz, needs a class of variational extensive states.

**Non-Gaussian Ansatz, [Polley89, Ritschel90]**

$$\Psi_{NG}[\phi] = U_{NG}\,\Psi_{SG}[\phi]$$
$$U_{NG} = \exp\left(\mathcal{B}\right)$$

# Non-Gaussian cMERA

## Non-Gaussian Ansatz

$$\mathcal{B} = -s \int_{\mathbf{p}\,\mathbf{q}_1\cdots\mathbf{q}_m} h(\mathbf{p}, \mathbf{q}_1, \ldots, \mathbf{q}_m) \underbrace{\frac{\delta}{\delta\phi(-\mathbf{p})}\phi(\mathbf{q}_1)\ldots\phi(\mathbf{q}_m)}_{y^m \frac{\partial}{\partial x}}$$

with $h(\mathbf{p}, \mathbf{q}_1, \ldots, \mathbf{q}_m) = g(p, q_1, ..., q_m)\bar{\delta}(\mathbf{p} + \mathbf{q}_1 + \cdots + \mathbf{q}_m)$

- $s$ is a variational parameter.
- $g(p, q_1, \ldots, q_m)$ is a variational function that must be optimized upon energy minimization and $m \in \mathbb{N}$
- The other variational parameter is the kernel $F(p) = (p^2 + \mu^2)^{-1/2}$ entering the Gaussian wavefunctional, where $\mu$ is a variational mass.

## Constraints

$$g(p, p, q_2, \ldots, q_m) = 0$$
$$g(p, q_1, \ldots, q_m) g(q_i, k_1, \ldots, k_m) = 0 \quad i = 1, \ldots, m$$

## Truncation of conmutator expansion

$$U_{NG}^{\dagger} \phi(\mathbf{p})\, U_{NG} = \widetilde{\phi}(\mathbf{p}) = \phi(\mathbf{p}) + s\, \Phi(\mathbf{p})$$
$$U_{NG}^{\dagger} \pi(\mathbf{p})\, U_{NG} = \widetilde{\pi}(\mathbf{p}) = \pi(\mathbf{p}) + s\, \Pi(\mathbf{p})$$

$$\Phi(\mathbf{p}) = \int_{\mathbf{q}_1 \cdots \mathbf{q}_m} h(\mathbf{p}\,, -\mathbf{q}_1 \cdots - \mathbf{q}_m) \phi(\mathbf{q}_1) \cdots \phi(\mathbf{q}_m)$$
$$\Pi(\mathbf{p}) = -\, m \int_{\mathbf{q}_1 \cdots \mathbf{q}_m} h(-\mathbf{q}_1\,, \mathbf{p}, \cdots - \mathbf{q}_m) \pi(\mathbf{q}_1) \phi(\mathbf{q}_2) \cdots \phi(\mathbf{q}_m)$$

# A Quantum Mechanical Flashback

For the case $\mathcal{B} = \pi\,\phi^2$ i.e $m = 2$

## Transformation of operators

$$\widetilde{\phi}(\mathbf{p}) = \phi(\mathbf{p}) + s \int_{\mathbf{q}_1,\mathbf{q}_2} h(\mathbf{p}, -\mathbf{q}_1, -\mathbf{q}_2)\, \phi(\mathbf{q}_1)\, \phi(\mathbf{q}_2)$$

$$x' = x + y^2$$

$$\frac{\delta}{\delta\widetilde{\phi}(-\mathbf{p})} = \frac{\delta}{\delta\phi(-\mathbf{p})} - 2\,s \int_{\mathbf{q}_1,\mathbf{q}_2} h(-\mathbf{q}_1, \mathbf{p}, -\mathbf{q}_2)\, \phi(\mathbf{q}_2)\, \frac{\delta}{\delta\phi(-\mathbf{q}_1)}$$

$$\left(\frac{\partial}{\partial y}\right)' = \left(\frac{\partial}{\partial y}\right) - 2\,y \left(\frac{\partial}{\partial x}\right)$$

# Non-Gaussian cMERA

Our proposal for non-Gaussian cMERA states $\Rightarrow$ scale-dependent NLCT

## NLCT

$$\widetilde{\phi}(\tilde{\mathbf{p}}) = U_{NG}(u)^{\dagger}\phi(\mathbf{p})U_{NG}(u)$$
$$\widetilde{\pi}(\tilde{\mathbf{p}}) = U_{NG}(u)^{\dagger}\pi(\mathbf{p})U_{NG}(u)$$

with $U_{NG}(u) = U_{NG}\, U_G(u, u_{IR})$ and $\mathbf{p} \equiv e^{u}\tilde{\mathbf{p}}$

## $\mathcal{B} = \pi\,\phi^2$ $(m = 2)$

$$\mathcal{B} = -s\int_{\mathbf{p}\,\mathbf{q}_1,\mathbf{q}_2} g(p, q_1, q_2)\,\pi(\mathbf{p})\phi(\mathbf{q}_1)\phi(\mathbf{q}_2)\bar{\delta}(\mathbf{p}+\mathbf{q}_1+\mathbf{q}_2)$$

# Interlude on $g(p,q,r)$

Anstaz for the constrained function $g(p,q,r)$ in terms of two variationally optimized coupling-dependent momentum cut-offs $\Delta_1$, $\Delta_2$, with $|\Delta_i| \leq \Lambda$.

$$g(p,q,r) = \Gamma\left[\left(\frac{p}{\Delta_1}\right)^2\right]\left(\Gamma\left[\left(\frac{\Delta_1}{q}\right)^2\right] - \Gamma\left[\left(\frac{\Delta_2}{q}\right)^2\right]\right) \times \left(\Gamma\left[\left(\frac{\Delta_1}{r}\right)^2\right] - \Gamma\left[\left(\frac{\Delta_2}{r}\right)^2\right]\right)$$

Fom a cMERA point of view, $g(p,q,r)$ might be understood as a variational coupling-dependent momentum cut-off function.

# Interlude on $g(p, q, r)$

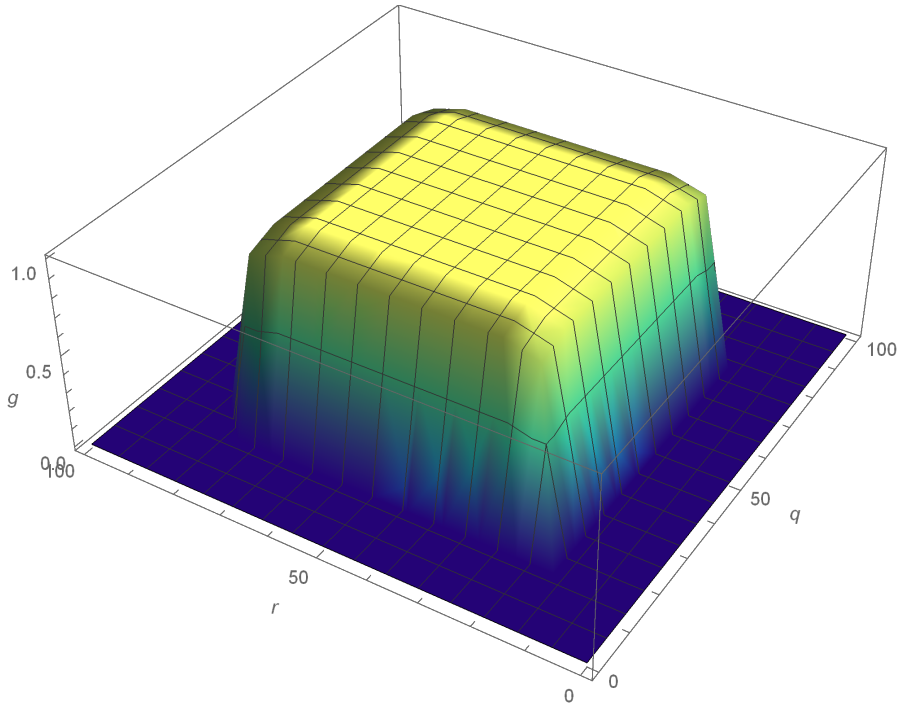


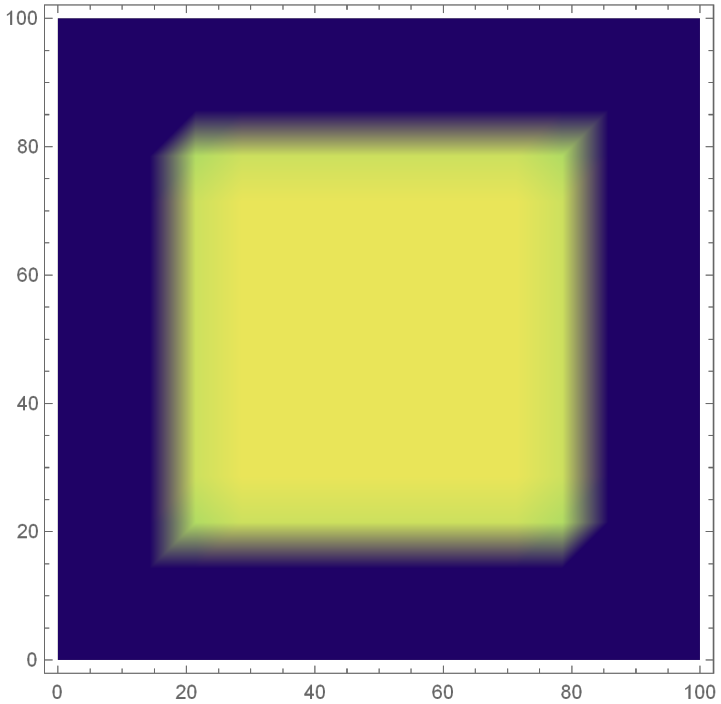


$\Lambda = 100,\ \Delta_1 = 20,\ \Delta_2 = 80.$

# Non-Gaussian cMERA

## u-NLCT

$$\widetilde{\phi}(\tilde{\mathbf{p}}) = e^{-f(p,u)-\frac{d}{2}u}\left(\phi(\tilde{\mathbf{p}}) + s\, e^{\frac{d}{2}u}\,\Phi(\tilde{\mathbf{p}})\right) \ ,$$

$$\widetilde{\pi}(\tilde{\mathbf{p}}) = e^{+f(p,u)-\frac{d}{2}u}\left(\pi(\tilde{\mathbf{p}}) - 2\, s\, e^{\frac{d}{2}u}\,\Pi(\tilde{\mathbf{p}})\right)$$

$$\Phi(\tilde{\mathbf{p}}) = \int_{\tilde{\mathbf{q}}_1\tilde{\mathbf{q}}_2} \tilde{g}(\tilde{p},\tilde{q}_1,\tilde{q}_2)\phi(\tilde{\mathbf{q}}_1)\phi(\tilde{\mathbf{q}}_2)\delta(\tilde{\mathbf{p}}-\tilde{\mathbf{q}}_1-\tilde{\mathbf{q}}_2) \ ,$$

$$\Pi(\tilde{\mathbf{p}}) = \int_{\tilde{\mathbf{q}}_1\tilde{\mathbf{q}}_2} \tilde{g}(\tilde{q}_1,\tilde{p},\tilde{q}_2)\pi(\tilde{\mathbf{q}}_1)\phi(\tilde{\mathbf{q}}_2)\delta(\tilde{\mathbf{p}}-\tilde{\mathbf{q}}_1-\tilde{\mathbf{q}}_2)$$

$$\tilde{g}(\tilde{p},\tilde{q}_1,\tilde{q}_2) = e^{f(\tilde{p}e^u,u)-f(\tilde{q}_1e^u,u)-f(\tilde{q}_2e^u,u)}\ g(\tilde{p}e^u,\tilde{q}_1e^u,\tilde{q}_2e^u)$$

# Non-Gaussian Correlation Functions

- Connected correlation functions of order higher than two vanish for Gaussian states while those of interacting systems are generally non zero.
- The multiscale approach in cMERA $\Rightarrow$ non-perturbative effects at different scales.

$$
\begin{aligned}
&G^{(n)}(\mathbf{x}_1, ..., \mathbf{x}_n) \equiv \langle \phi_1 \cdots \phi_n \rangle_{NG} = \langle \phi_1 \cdots \phi_n \rangle_G + \\
&s \left[ \langle \Phi_1 \phi_2 \cdots \phi_n \rangle_G + \cdots + \langle \phi_1 \cdots \phi_{n-1} \Phi_n \rangle_G \right] + \\
&s^2 \left[ \langle \Phi_1 \Phi_2 \phi_3 \cdots \phi_n \rangle_G + \cdots + \langle \phi_1 \cdots \Phi_{n-1} \Phi_n \rangle_G \right] + \cdots \\
&s^n \langle \Phi_1 \cdots \Phi_n \rangle_G \ ,
\end{aligned}
$$

where $\phi_i \equiv \phi(\mathbf{x}_i)$ and $\Phi_j \equiv \Phi(\mathbf{x}_j)$.

# Non-Gaussian Correlation Functions

The connected correlation functions contain information about the interaction.

$$G_c^{(2)}(\mathbf{x}_1, \mathbf{x}_2) = \tilde{D}(12) + s^2 \tilde{\chi}_2(12) \ ,$$
$$G_c^{(3)}(\mathbf{x}_1, \mathbf{x}_2, \mathbf{x}_3) = s[\tilde{\chi}_3]_{(123)} + s^3 \tilde{\chi}_4(12, 23, 31) \ ,$$
$$G_c^{(4)}(\mathbf{x}_1, \mathbf{x}_2, \mathbf{x}_3, \mathbf{x}_4) = \frac{s^2}{2} [\tilde{\chi}_5] + s^4 \left([\tilde{\chi}_2 \, \tilde{\chi}_2] + [\tilde{\chi}_6]\right) \ ,$$

$\tilde{D}(ab) \equiv D(ab; u)$ is the scale-dependent propagator

$$\tilde{D}(ab) = \frac{1}{2} \int_{\mathbf{p}} e^{-2f(p,u)} F(pe^{-u}) \, e^{i\mathbf{p}\cdot\mathbf{x}_{ab}} \ ,$$

The loop integrals $\tilde{\chi}_i(\mathbf{x}; u)$, depend both on the positions and the scale $u$.

# $\chi$-Integrals (sketchy)

$$f_{pq} \equiv f(\mathbf{p},\mathbf{q}) \equiv g(|\mathbf{p}+\mathbf{q}|, p, q) \quad \mathbb{p} = e^{-u}\, p$$

$$\tilde{\chi}_2(ab;u) = \int_{\mathbf{p}_1,\mathbf{p}_2} \Sigma_2(u)\, f_{12}^2\; F(\mathbb{p}_1)F(\mathbb{p}_2)\; \times\, e^{i(\mathbf{p}_1+\mathbf{p}_2)\mathbf{x}_{ab}}$$

$$\tilde{\chi}_3(ab/cd;u) = \int_{\mathbf{p}_1,\mathbf{p}_2} \Sigma_3(u)\, f_{12}\; F(\mathbb{p}_1)F(\mathbb{p}_2)\; \times\, e^{i\mathbf{p}_1\mathbf{x}_{ab}}\, e^{i\mathbf{p}_2\mathbf{x}_{cd}}$$

$$\tilde{\chi}_4(ab/cd/ef;u) = \int_{\mathbf{p}_{1,2,3}} \Sigma_4(u)\, f_{12}\, f_{23}\, f_{31}\;\; F(\mathbb{p}_1)F(\mathbb{p}_2)F(\mathbb{p}_3)$$
$$\times\, e^{i\mathbf{p}_1\mathbf{x}_{ab}}\, e^{i\mathbf{p}_2\mathbf{x}_{cd}}\, e^{i\mathbf{p}_3\mathbf{x}_{ef}}$$

# $\chi$-Integrals (sketchy)

$$f_{pq} \equiv f(\mathbf{p},\mathbf{q}) \equiv g(|\mathbf{p}+\mathbf{q}|, p, q) \quad \mathbb{p} = e^{-u}\, p$$

$$\tilde{\chi}_2(ab;u) = \int_{\mathbf{p}_1,\mathbf{p}_2} \Sigma_2(u)\,\left(s^2 \times f_{12}^2\right)\; F(\mathbb{p}_1)F(\mathbb{p}_2)\; \times e^{i(\mathbf{p}_1+\mathbf{p}_2)\mathbf{x}_{ab}}$$

$$\tilde{\chi}_3(ab/cd;u) = \int_{\mathbf{p}_1,\mathbf{p}_2} \Sigma_3(u)\,\left(s \times f_{12}\right)\; F(\mathbb{p}_1)F(\mathbb{p}_2)\; \times e^{i\mathbf{p}_1\mathbf{x}_{ab}}\, e^{i\mathbf{p}_2\mathbf{x}_{cd}}$$

$$\tilde{\chi}_4(ab/cd/ef;u) = \int_{\mathbf{p}_{1,2,3}} \Sigma_4(u)\,\left(s^3 \times f_{12}\, f_{23}\, f_{31}\right)\; F(\mathbb{p}_1)F(\mathbb{p}_2)F(\mathbb{p}_3)$$
$$\times\, e^{i\mathbf{p}_1\mathbf{x}_{ab}}\, e^{i\mathbf{p}_2\mathbf{x}_{cd}}\, e^{i\mathbf{p}_3\mathbf{x}_{ef}}$$

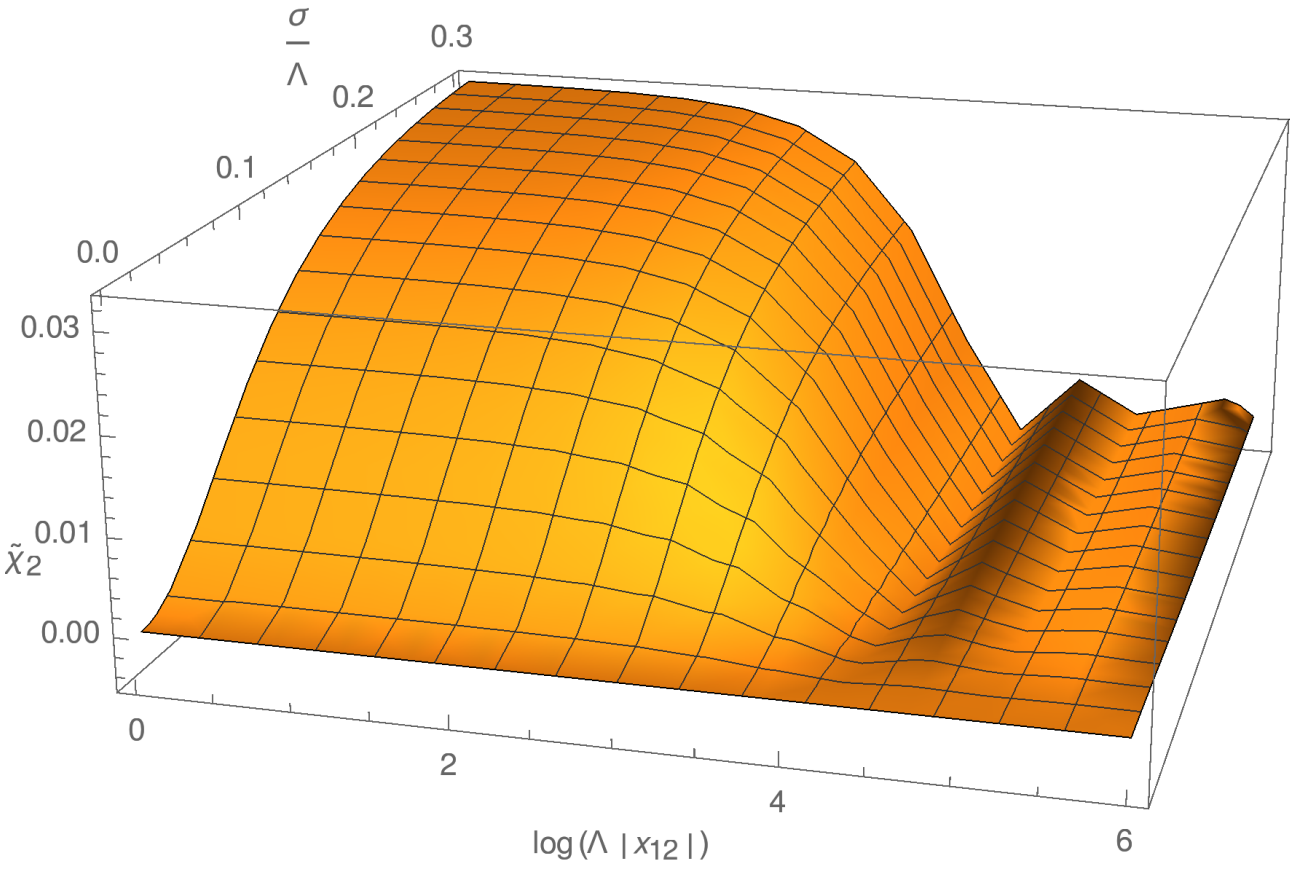


$\tilde{\chi}_2(12) = s^{-2}\left(G_c^{(2)}(12) - \tilde{D}(12)\right)$, as a function of the scale $\sigma/\Lambda$ and the distance $|\mathbf{x}_{12}|$ ($\Lambda = 100$, $\mu = 10$, $\Delta_1/\Delta_2 = 0.06$)

# Optimization of NG-cMERA

Variational parameters $\{\mu\,, s\,, g(p,q,r)\}$ obtained by minimising

**Energy Functional $\lambda\,\phi^4$**

$$\begin{aligned}\langle\mathcal{H}\rangle = \Delta_1 + s^2\chi_7 + \frac{1}{2}(m^2-\mu^2)I_0(\mu) \\ + \frac{1}{2}m^2(s^2\chi_2+\phi_c^2) + \frac{\lambda}{4!}\Big[3\Delta_0^2 + 6s^2(\Delta_0\chi_2+\chi_5) \\ + 3s^4(\chi_2^2+\chi_6) + 4\phi_c(3s\chi_3+s^3\chi_4) + 6\phi_c^2(\Delta_0+s^2\chi_2) + \phi_c^4\Big]\,,\end{aligned}$$

$\phi_c = \chi_0 + s\chi_1$. $\chi_i \equiv \tilde{\chi}_i(\mathbf{x}_{ab}=0; u=0)$. $\Delta_N = I_N(\mu) - I_N(m)$, with

$$I_N(z) = \frac{1}{2}\int_{\mathbf{p}}(p^2+z^2)^{N-\frac{1}{2}}\ .$$

# Gap Equation

$$\mu^2 = m^2 + \frac{\lambda}{2}\left(\Delta_0 + \phi_c^2 + s^2\chi_2\right)$$

$$\phi_c = \chi_0 + s\chi_1$$

# Optimization of NG-cMERA: Beyond Gaussian

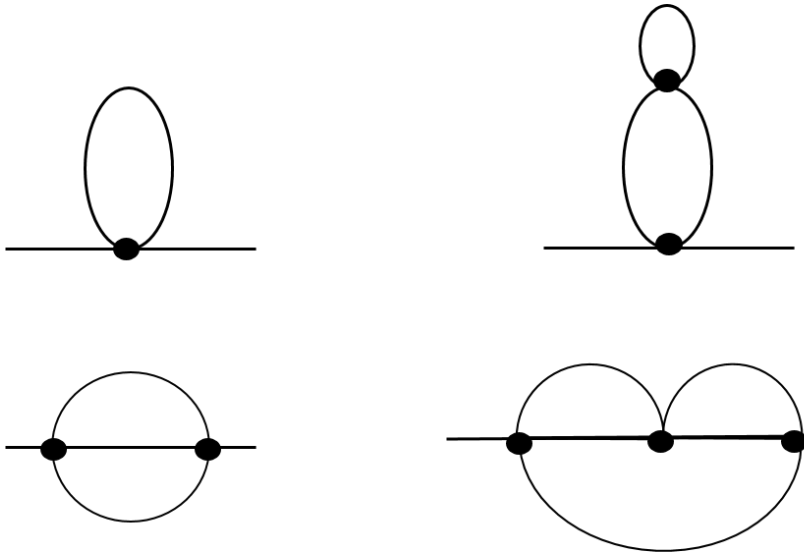

Gaussian $\equiv$ "Cactus" diagrams

$\chi$ Integrals $\Rightarrow$ SD-like equation

$$f(\mathbf{p},\mathbf{q}) = F(p+q)\left(1 - 8\lambda \int_{\mathbf{k}} \left[f(\mathbf{p},\mathbf{k}) + f(\mathbf{q},\mathbf{k})\right] F(k)\right)$$

# Outline

# Conclusions

- Method for building non-Gaussian generalisations of the cMERA.
- Non-linear transformations that shift the field modes by non-linear functions of modes with non-overlapping domains in momentum space.
- NG-cMERA as a systematic UV regularization scheme for generic interacting QFTs.
- Suitable to be extended to fermionic, gauge field theories and dynamical settings such as quantum quenches.
- Geometrical/Holographic interpretation for the NG-cMERA?

# Thanks!