The $\mathbb{Z}_2$ Bose-Hubbard model

From symmetry breaking to symmetry protection

Daniel González Cuadra

ICFO – The Institute of Photonic Sciences

Quantum Optics Theory Group

13th June 2019

Outline

Introduction

Classifying Quantum Matter

Landau's Paradigm

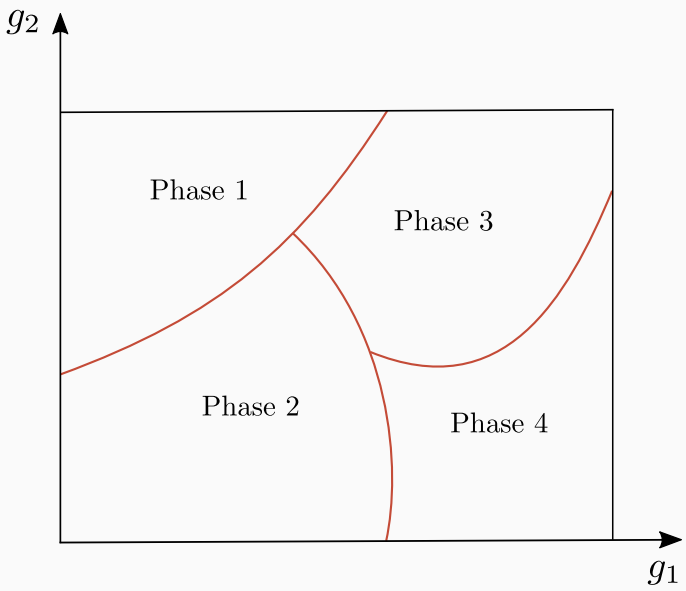

Phases of matter have different symmetries: Gas, solid, ferromagnet, superconductor, etc.

Spontaneous Symmetry Breaking

Different phases are classified using **local order parameters** :

- $\langle \psi_0(g) | \hat{\mathcal{O}} | \psi_0(g) \rangle = 0$ for $g < g_c$
- $\langle \psi_0(g) | \hat{\mathcal{O}} | \psi_0(g) \rangle \neq 0$ for $g > g_c$

Symmetry-Protected Topological Phases (SPT)

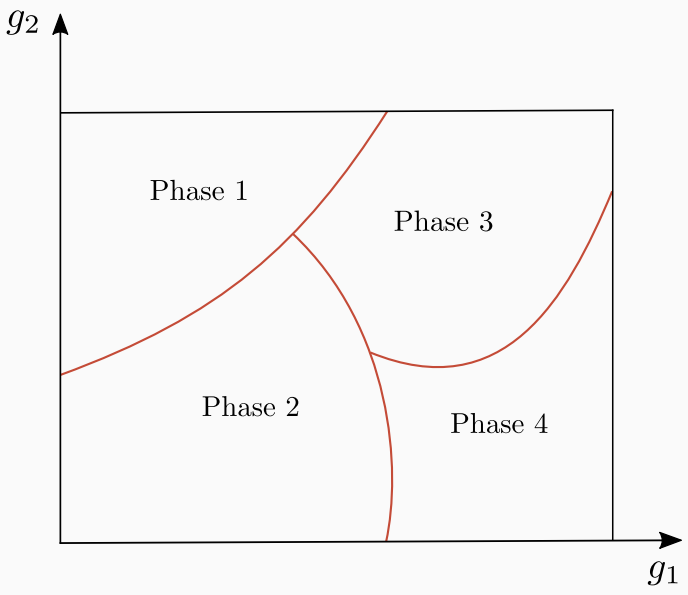

- **Symmetry classes**
  1, 2, 3, 4....

Symmetry-Protected Topological Phases (SPT)

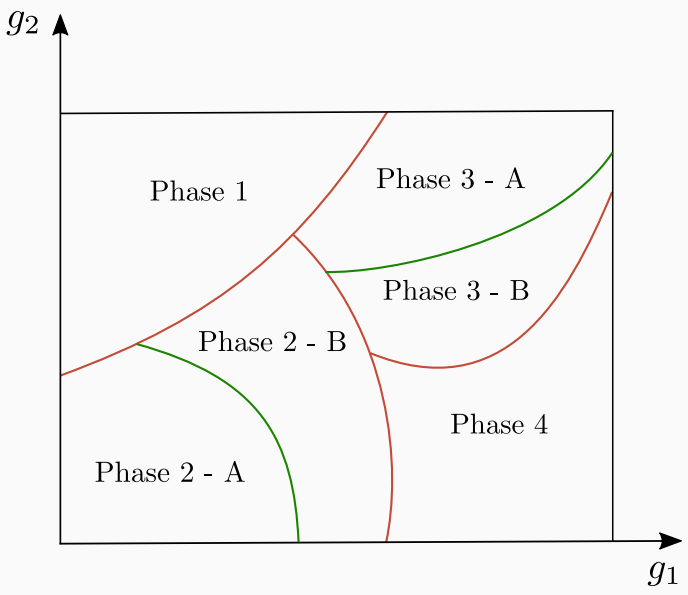

- **Symmetry classes**
  1, 2, 3, 4....
- **Topological sectors**
  A, B, C....

  Quantum Hall states, Haldane phase, Topological insulators, etc.

Symmetry Protection

SPT phases are classified using **topological invariants**. They are protected against perturbations that respect the **protecting symmetry** as long as the gap does not close.

Intertwined Topological Phases

SSH Model

Su-Schrieffer-Heeger Model (SSH)

SSH Hamiltonian: electrons + phonons [Su *et al*, PRL **42**, 1698 (1979)]

Theorem [Peierls, 1955]

A 1D equally spaced chain with one electron per ion is unstable

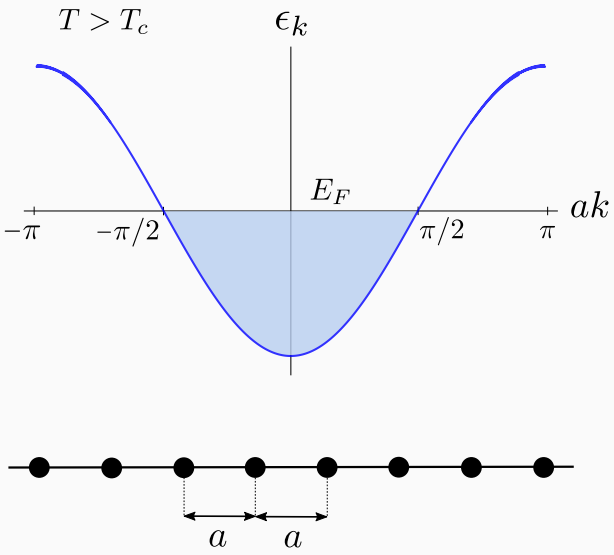

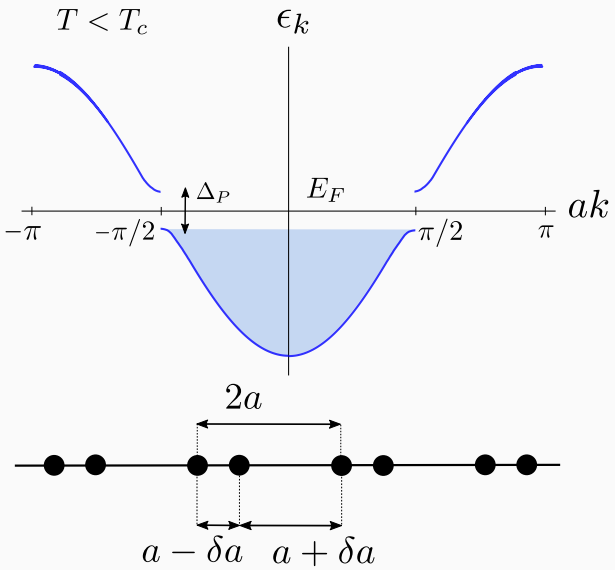

Su-Schrieffer-Heeger Model (SSH)

SSH Hamiltonian: electrons + phonons [Su *et al*, PRL **42**, 1698 (1979)]

Theorem [Peierls, 1955]

A 1D equally spaced chain with one electron per ion is unstable

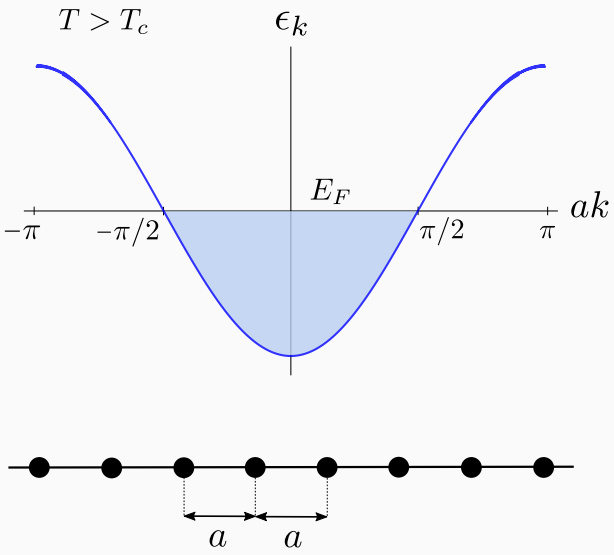

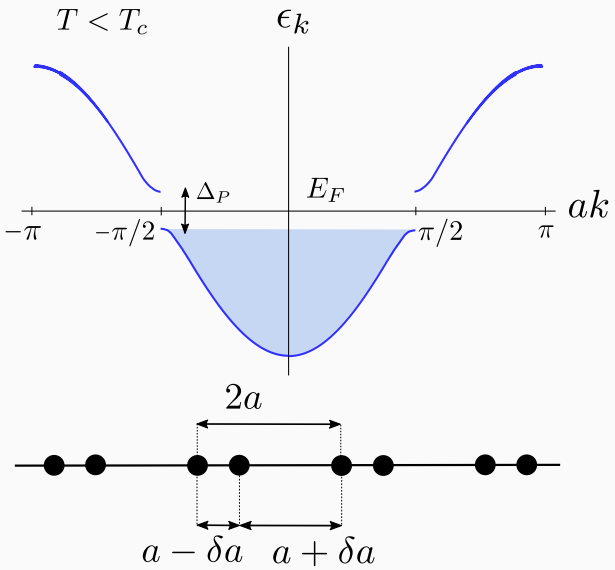

Bond Order Wave

$$\langle \hat{c}_i^\dagger \hat{c}_{i+1} + \text{H.c.} \rangle \sim 1 + \delta(-1)^i$$

Degenerate g.s.

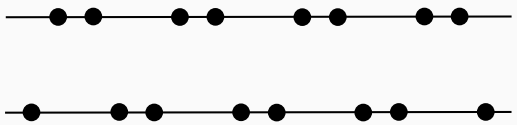

SSH as a Topological Insulator

(a)

(b)

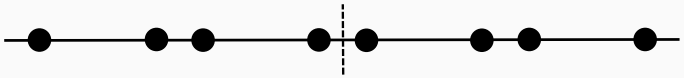

- **Inversion Symmetry**

Topological invariant: Zak phase

Band insulator: $\varphi_{\mathsf{Zak}} = 0$

Topological insulator: $\varphi_{\mathsf{Zak}} = \pi$

$$\varphi_{\mathsf{Zak}} = \int_{\mathsf{BZ}} \mathrm{d}k \, \langle u_{n,k} | \partial_k u_{n,k} \rangle \, \mathrm{mod} 2\pi$$

$\mathbb{Z}_2$ Bose-Hubbard Model

Simulating Lattice Dynamics with Spins

$\mathbb{Z}_2$ Bose-Hubbard Model

DG *et al*, Phys. Rev. Lett. **121**, 090402 (2018)

DG *et al*, Phys. Rev. B **99**, 045139 (2019)

$$\hat{H}_{\mathrm{BH}} = -t \sum_i \left(\hat{b}_i^\dagger \hat{b}_{i+1} + \mathrm{H.c.} \right) + \frac{U}{2} \sum_i \hat{n}_i (\hat{n}_i - 1),$$

$$\hat{H}_{\mathbb{Z}_2} = -\alpha \sum_i \left(\hat{b}_i^\dagger \hat{\sigma}^z_{i,i+1} \hat{b}_{i+1} + \mathrm{H.c.} \right) + \beta \sum_i \hat{\sigma}^x_{i,i+1},$$

$$\hat{H}_\Delta = \frac{\Delta}{2} \sum_i \hat{\sigma}^z_{i,i+1}, \quad \hat{H}_{\mathbb{Z}_2\mathrm{BH}} = \hat{H}_{\mathbb{Z}_2} + \hat{H}_{\mathrm{BH}} + \hat{H}_\Delta$$

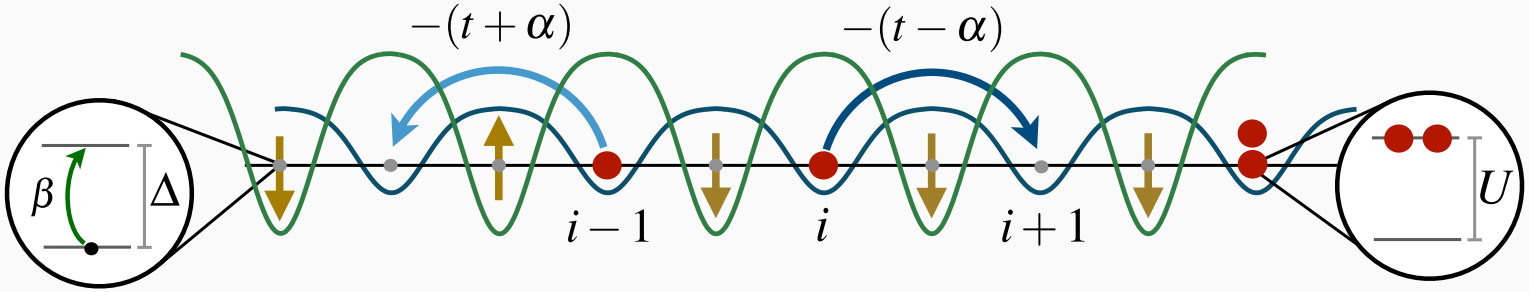

$\mathbb{Z}_2$ Bose-Hubbard Model

Half Filling: $\rho = 1/2$

Topological Bond Order Wave (TBOW)

Jordan-Wigner transformation: $U \to \infty$, $\beta = 0$

$$\hat{H} = -\sum_i \left[\hat{c}_i^\dagger (t + \alpha \hat{\sigma}_i^z) \hat{c}_{i+1} + \text{h.c.}\right] + \frac{\Delta}{2} \sum_i \hat{\sigma}_i^z$$

Topological Bond Order Wave (TBOW)

Jordan-Wigner transformation: $U \to \infty$, $\beta = 0$

$$\hat{H} = -\sum_i \left[\hat{c}_i^\dagger (t + \alpha \hat{\sigma}_i^z) \hat{c}_{i+1} + \text{h.c.}\right] + \frac{\Delta}{2} \sum_i \hat{\sigma}_i^z$$

- Metallic phase
  $\Delta = 0$, $\Delta \gg \alpha$
- **Bond Order Wave**
  $\Delta_c^- < \Delta < \Delta_c^+$

Simulating SSH physics

We obtain an **intertwined topological phase** using a simplified dynamical lattice.

Trivial $\text{BOW}_{1/2}$: $\varphi_{\text{Zak}} = 0$

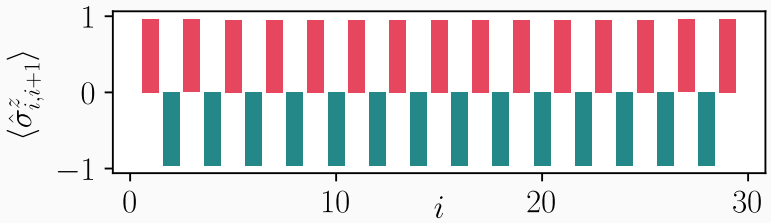

Topological $\text{BOW}_{1/2}$: $\varphi_{\text{Zak}} = \pi$

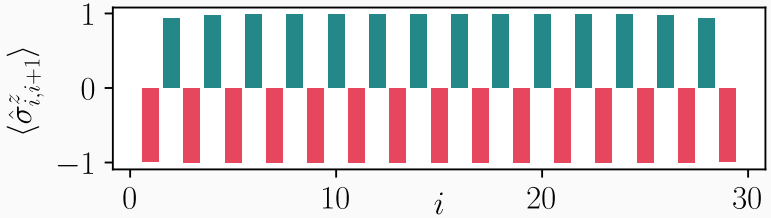

- $\text{TBOW}_{1/2}$ survives for $\beta > 0$

Topological Bond Order Wave (TBOW)

New (synthetic) phase of matter

$\mathrm{TBOW}_{1/2}$ survives for finite U (**Bosonic Peierls Transition**).

Topological Bond Order Wave (TBOW)

New (synthetic) phase of matter

$\mathrm{TBOW}_{1/2}$ survives for finite U (**Bosonic Peierls Transition**).

Many-body edge states

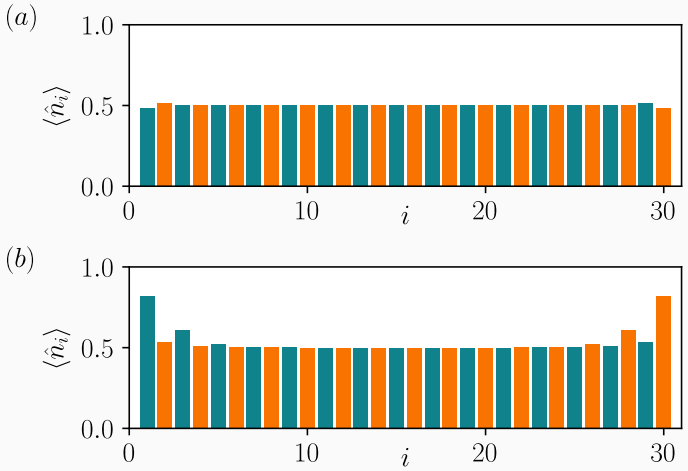

(a) Trivial BOW

(b) Topological BOW

Interaction-Induced Transition

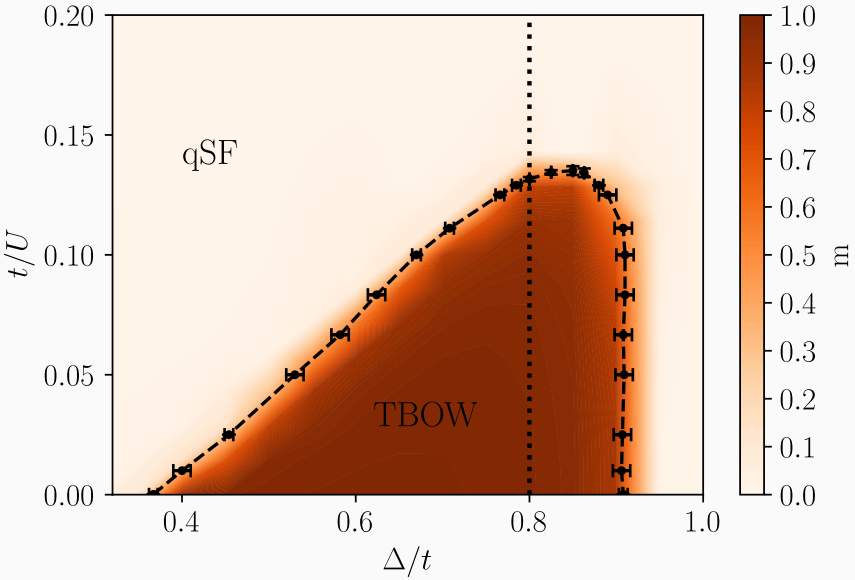

$$m = \sum_i (-1)^i \langle \sigma_{i,i+1} \rangle$$

$\mathbb{Z}_2$ Bose-Hubbard Model

Fractional fillings: $\rho = 1/3$, $\rho = 2/3$

Emergent Symmetry Protection

DG *et al*, arXiv:1903.01911 (2019) (accepted in Nat. Commun.)

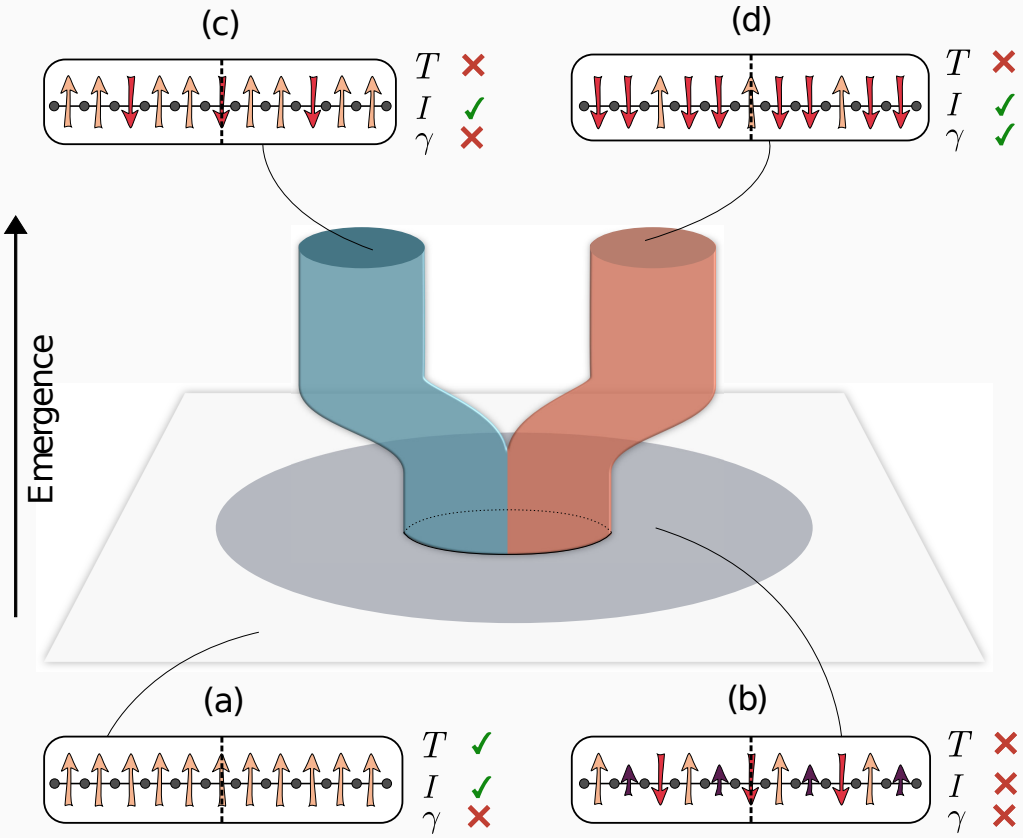

$\mathcal{T}$: translation, $\mathcal{I}$: inversion, γ: topology

Interaction-Induced Topological Phase Transitions

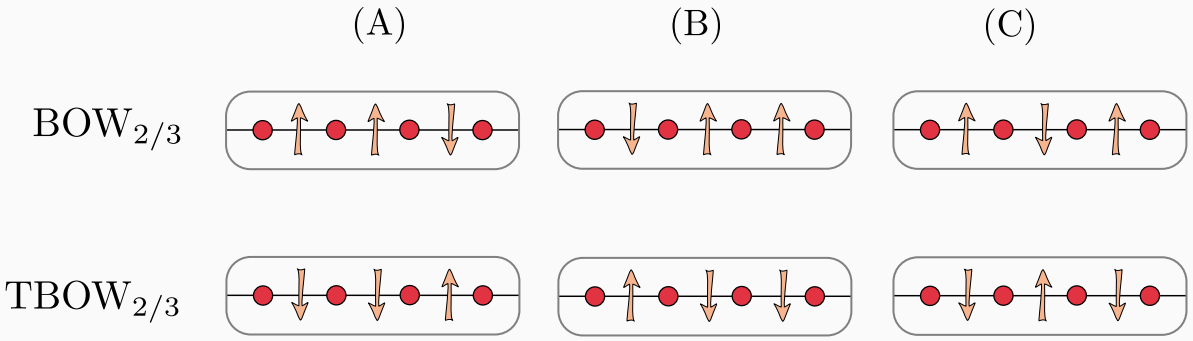

Interaction-Induced Topological Phase Transitions

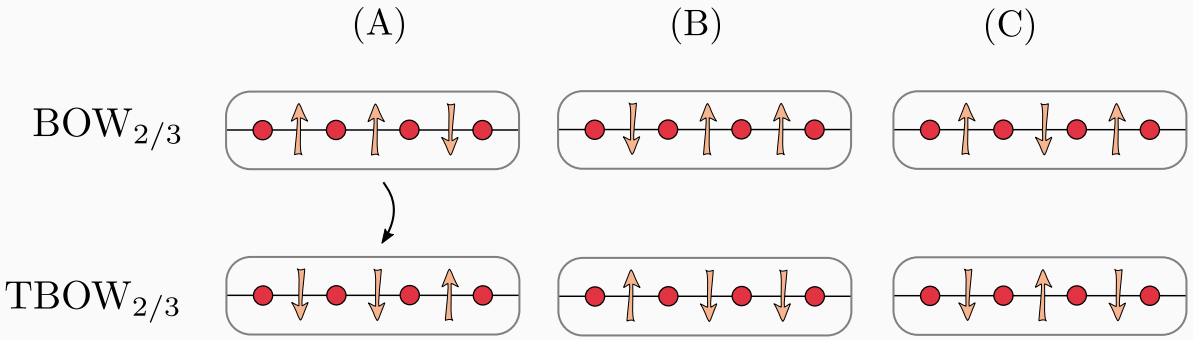

Interaction-Induced Topological Phase Transitions

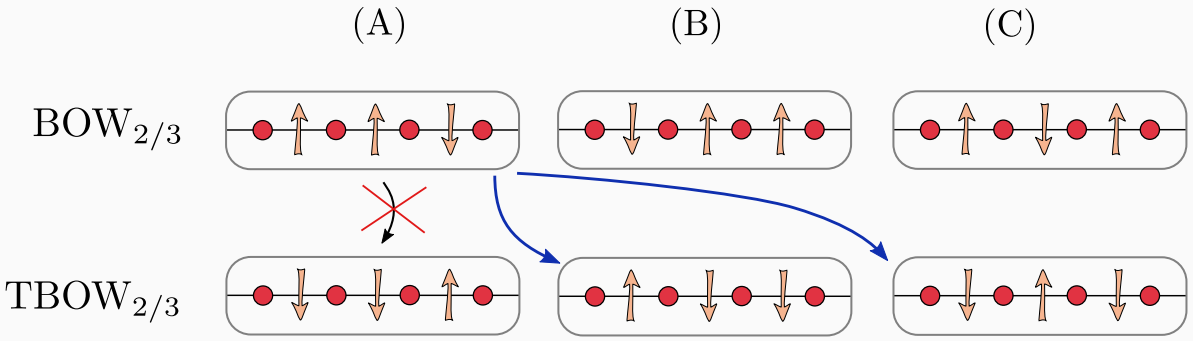

Interaction-Induced Topological Phase Transitions

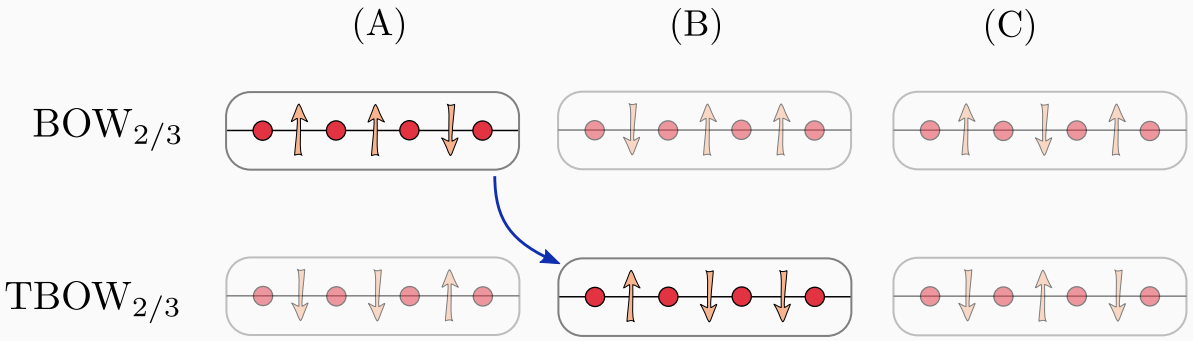

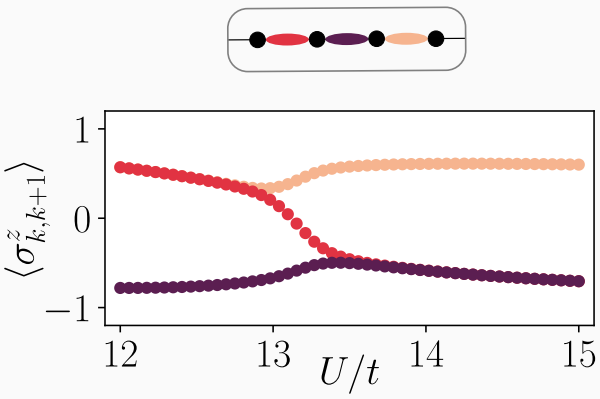

$$\mathcal{O}_1\mathcal{O}_2 = \langle \sigma_1^z - \sigma_2^z \rangle \langle \sigma_2^z - \sigma_3^z \rangle$$

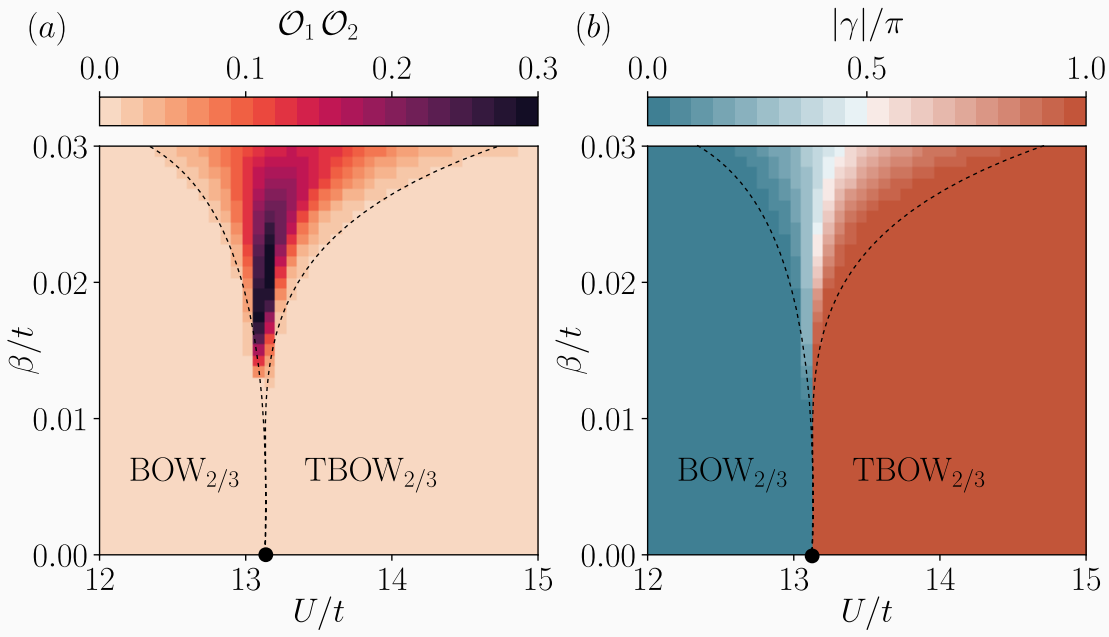

$\mathbb{Z}_2$ Bose-Hubbard Model

Self-Adjusting Fractional Pumping

Thouless Pumping

Archimedes's screw

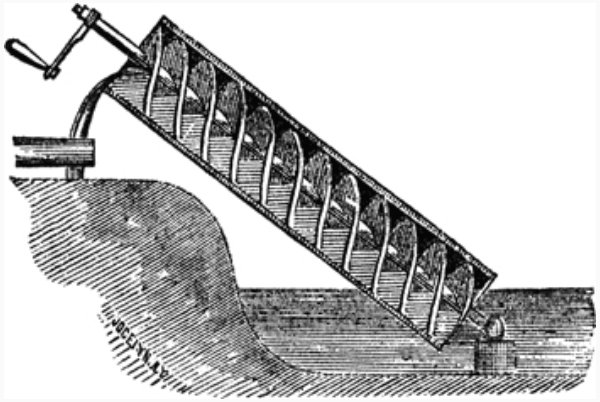

Quantum Pumping

The integrated particle current produced by a slow periodic variation of the potential of a Schrödinger equation in an infinite periodic system with full bands must have an integer value. Thouless, Phys. Rev. B 27, 6083 (1983)

Rice-Mele model

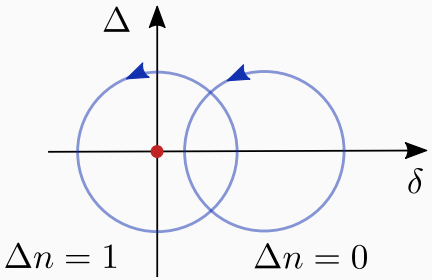

$$\Delta n = -\frac{1}{2\pi} \sum_n \int_0^T \mathrm{d}t \int_{\mathrm{BZ}} \mathrm{d}q \, \Omega^n_{qt}$$

$$\Omega^n_{qt} = i \left(\langle \partial_q u_n | \partial_t u_n \rangle - \langle \partial_t u_n | \partial_q u_n \rangle \right)$$

$$\hat{H} = -\sum_i \left([t + \delta \cos(\varphi)(-1)^i] \hat{c}_i^\dagger \hat{c}_{i+1} + \mathrm{H.c.} \right) + \Delta \sin(\varphi) \sum_i (-1)^i \hat{n}_i$$

Self-Adjusted Fractional Pumping

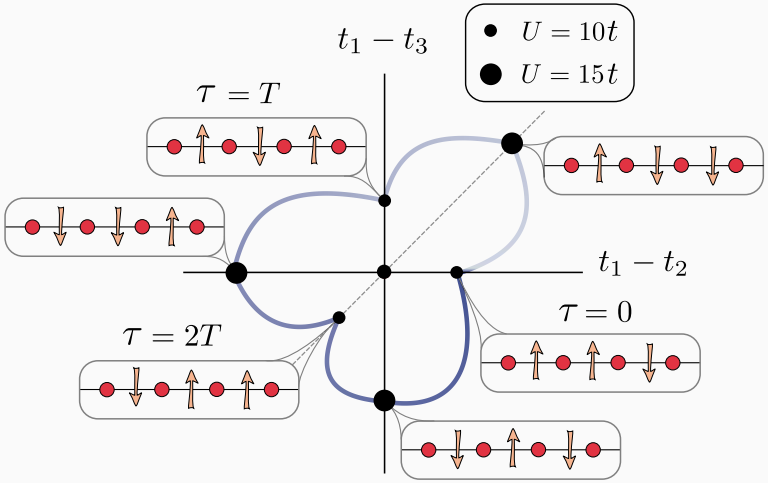

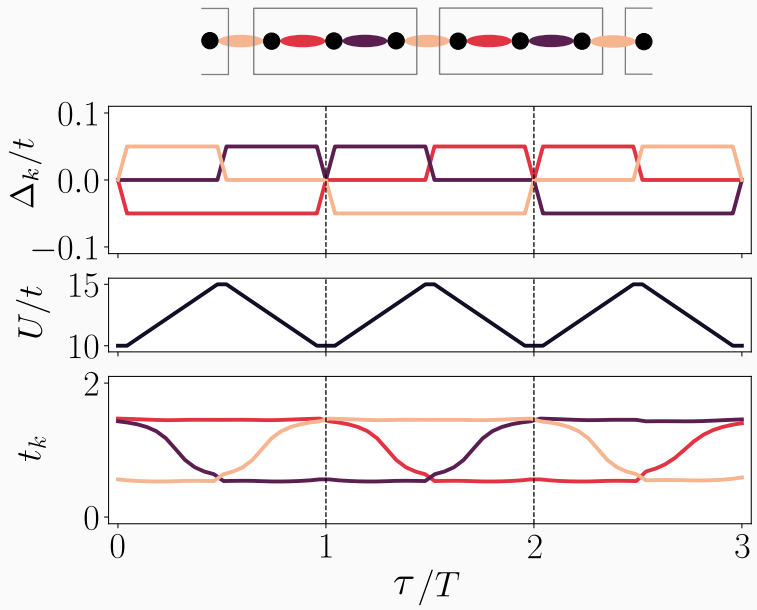

$$t_k = t + \alpha\langle\sigma_k^z\rangle$$

Transported charge

$$P_L(t) = \frac{1}{L}\sum_j (j - j_0)\,\langle\Psi(t)|\,\hat{n}_j\,|\Psi(t)\rangle$$

$$\Delta P_L(t_i) = P_L(t_i^+) - P_L(t_i^-)$$

$$\Delta n_L = -\sum_i \Delta P_L(t_i)$$

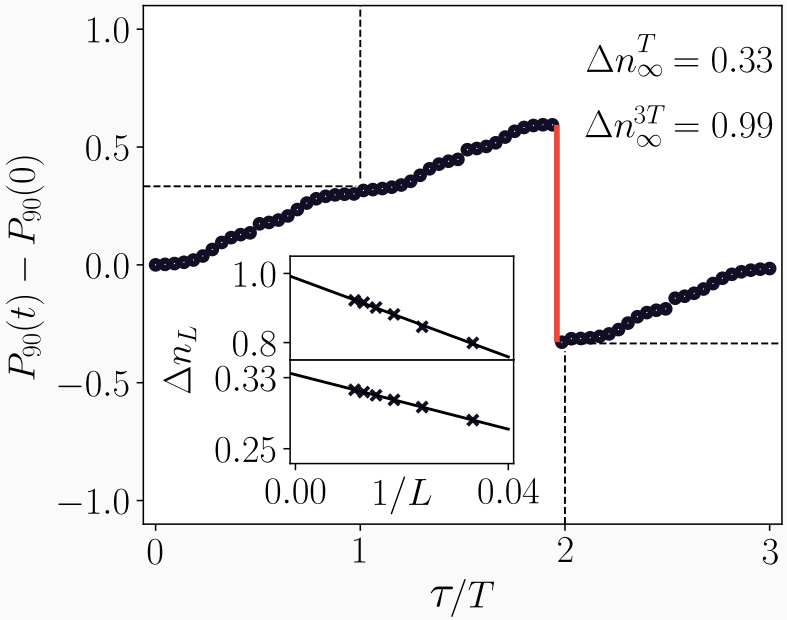

Summary and Outlook

DG *et al*, Phys. Rev. Lett. **121**, 090402 (2018)
DG *et al*, Phys. Rev. B **99**, 045139 (2019)

DG *et al*, arXiv:1903.01911 (2019) (accepted in Nat. Commun.)

- We model a **dynamical lattice** using $\mathbb{Z}_2$ fields
- Simulation of Peierls physics with cold atoms
- Beyond SSH: **Bosonic Peierls transition**
- **TBOW**: Interaction-induced intertwined topological phase
- **Interplay** between SSB and SPT: constrained topological transitions and self-adjusted fractional pumping

Special thanks: Alexandre Dauphin, Przemysław R. Grzybowski, Paweł Wójcik, Maciej Lewenstein, Alejandro Bermudez